HAWORTH

Be_Hold Be Storage

GSA Price List – March 2025

This price list is based upon Haworth's February 2025 commercial pricing.
GENERAL SERVICES ADMINISTRATION FEDERAL SUPPLY SERVICE
Authorized Federal Supply Scheduled Price List (Catalog) Office Furniture, Wood Casegoods and Tables
(FSC Group 71, Part I, FSC Classes 7105, 7110, 7125 and 7195)
Contract No: GS-03F-057DA | Contract Period: February 8, 2016 – February 7, 2026 | Business: Large
Contractor: Haworth, Inc. | One Haworth Center | Holland, MI 49423-9576 | 1.616.393.3000

HAWORTH

This Haworth North American price book contains US list prices.
Canadian customers can convert the US list price into their Canadian equivalent by going to **www.Haworth.com/Canada** to find the current Canadian multipliers. These multiplier factors allow you to convert the US list price into a Canadian list price.

HAWORTH, INC.
GENERAL SERVICES ADMINISTRATION
FEDERAL ACQUISITION SERVICES

Authorized Federal Supply Schedule
Furniture
(FSC Group 71, FSC Classes 7105, 7110, 7125 and 7195)

Contract Number:	GS-03F-057DA
Contract Start Date:	February 8, 2016
Contract End Date:	February 7, 2026
Contractor:	HAWORTH, INC. One Haworth Center Holland, MI 49423-9576 1-616-393-3000 http://www.haworth.com/government
Business Size:	Large

Information for Ordering Activities
I-FSS-600

Online access to Haworth's Authorized Federal Supply Schedule contract ordering information, terms and conditions, and up-to-date product and discount listing can be found at GSA Advantage, eLibrary link here.

This Page Intentionally Left Blank

Be_Hold Be Price List

Includes pricing, catalog numbers, finish codes/availability, specification requirements, line art, dimensions, and specification tips for Be_Hold Be.

Modular Lower Storage
Modular Lower Storage Tops
Modular Lower Storage Cushions
Upper Storage
Upper Storage Support
Freestanding Storage
Accessories

GSA SIN 33721
Canadian Conversion Factor: Refer to haworth.com/Canada

Table of Contents

Price List

Statement of Line 8

Modular Lower Storage

Pedestals — Catalog Logic 16
2H Slim Pedestal - Attached — Personal Drawer/Open 17
2H Slim Pedestal - Attached — Hinged Door 18
1.5H Pedestal — Drawers 19
2H Pedestal - Attached — Drawers 20
1.5H Slim Pedestal - Mobile — Personal Drawer/Open 22
1.5H Slim Pedestal - Mobile — Hinged Door 23
1.5H Pedestal - Mobile — Drawers 24
2H Pedestal - Mobile — Drawers 25
Open Cabinet — Catalog Logic 26
Storage Cabinet — Catalog Logic 27
1.5H Storage Cabinet — Open 28
1.5H Storage Cabinet — Single Hinged Door — 18”W 29
1.5H Storage Cabinet — Double Hinged Door — 24”W, 30”W, 36”W . . 30
2H Storage Cabinet - Attached — Open 31
2H Storage Cabinet - Attached — Single Hinged Door — 18”W 32
2H Storage Cabinet - Attached — Double Hinged Door — 24”W, 30”W, 36”W 33
3H Storage Cabinet — Open 34
3H Storage Cabinet — Single Hinged Door — 18”W 35
3H Storage Cabinet — Double Hinged Door — 24”W, 30”W, 36”W . . . 36
Lateral File — Catalog Logic 37
1.5H Lateral File — Box/File 38
1.5H Lateral File — Open/File 40
2H Lateral File - Attached — Box/Box/File 41
2H Lateral File - Attached — File/File 43
2H Lateral File - Attached — Open/Box/File 45
3H Lateral File — File/File/File 47
Credenza with Sliding Doors — Catalog Logic 48
Credenza with Drawers — Catalog Logic 49
Credenza with Drawers - Mobile — Catalog Logic 50
Credenza with Drawers for HAT — Catalog Logic 51
1.5H Credenza - Preconfigured — Sliding Doors 52
1.5H Credenza - Preconfigured — Drawers 53
2H Credenza - Preconfigured - Attached — Sliding Doors 56
2H Credenza - Preconfigured - Attached — Drawers 57
1.5H Credenza - Preconfigured - Mobile — Drawers 62
1.5H Storage for Height Adjustable Table - Preconfigured - Attached — Open Cabinet 63
1.5H Credenza for Height Adjustable Table - Preconfigured - Attached — Drawers 64

Modular Lower Storage Tops

1.5H Height Adjustable Table Storage Top - Laminate - 0.75” Thick — HAT Storage Top 67
2H Storage Tops - Laminate - 1.18″ Thick — Pedestal Top 68
2H Storage Tops - Laminate - 1.18″ Thick — Filing and Storage Top . . . 68
Common Top - Laminate - 1.18” Thick — Common Top 69

Modular Lower Storage Cushions

Cushion Top — Pedestal Cushion Top 72
Cushion Top — Filing and Storage Cushion Top 72

Upper Storage

Stack-On Storage — Catalog Logic 73
Stack-On Bookcase - for 1.5H Lower Storage — Open 74
Stack-On Storage Cabinet - for 1.5H Lower Storage — Singled Hinged Door 75
Stack-On Storage Cabinet - for 1.5H Lower Storage — Double Hinged Door 76
Stack-On Bookcase - for 2H Lower Storage — Open 77
Stack-On Storage Cabinet - for 2H Lower Storage — Singled Hinged Door 78
Stack-On Storage Cabinet - for 2H Lower Storage — Double Hinged Door 79
Overhead Storage Unit — Catalog Logic 80
Overhead Storage Unit — Open — Single Sided 81
Overhead Storage Unit — Open — Dual Sided 82
Overhead Storage Unit — Sliding Door — Single Sided 83
Overhead Storage Unit — Sliding Door — Dual Sided 84
Overhead Storage Unit — Hinged Door — Single Sided 85

Upper Storage Support

For use with Intuity Benching, Be_Hold, Be_Hold Be and A Series Storage — Stanchion 87
For use with Intuity Benching — Worksurface to Storage Bracket – Intuity with Access Hatch Mid-Mod Mount 88
For use with Intuity Benching — Worksurface to Storage Bracket – Intuity without Access Hatch 88
For use with Compose Panels — Off-Modular Top Trim Mounting 24”(610mm)-120”(3048mm) for Compose 89
For use with Compose 26”(660mm) High Panel, Compose Connections and Compose Beam — Centered Single Panel Mount — Stanchion for use with Standard Aluminum Top Trim 90
For use with Compose 26”(660mm) High Panel, Compose Connections and Compose Beam — Centered Single Panel Mount — Stanchion for use with Work Rail Top Trim 90
For use with Compose and UniGroup Too Panels — Center Mount Overhead Storage Unit — Worksurface to Storage Bracket – Compose 26”(660mm) High Panel, Compose Connections and Compose Beam Mount 91
For use with Compose and UniGroup Too Panels — Center Mount Overhead Storage Unit — Top Mount Bracket – Compose and UniGroup Too Panels 91
For use with Compose 26”(660mm) High Panel, Compose Connections and Compose Beam — Off Modular Rail for mounting Compose to Be_Hold Upper Storage – Stanchion Mounted 92
For use with Compose 26”(660mm) High Panel, Compose Connections and Compose Beam — End Cap, Off-Modular Rail – For use with Be_Hold Upper Storage – Stanchion Mounted 92
For use with Compose 26”(660mm) High Panel, Compose Connections and Compose Beam — Off-Modular Rail Mounting — Off-Modular Stanchion – For use with Standard Aluminum Top Trim 93
For use with Compose 26”(660mm) High Panel, Compose Connections and Compose Beam — Off-Modular Rail Mounting — Off-Modular Stanchion – For use with Work Rail Top Trim 93
For use with Compose 26”(660mm) High Panel, Compose Connections and Compose Beam — Off-Modular Rail Mounting — Worksurface to Storage Bracket – For use with Off-Modular Rail – Compose 26”(660mm) High Panel, Compose Connections and Compose Beam 94

Freestanding Storage

Bookcase — Catalog Logic 95
Bookcase 96
Storage Cabinet — Catalog Logic 98
Storage Cabinet — Single Hinged Door 99
Storage Cabinet — Double Hinged Door 100
Wardrobe — Catalog Logic 102
Single Hinged Door Wardrobe 103
Personal Storage Tower — Catalog Logic 108
Personal Storage Towers - 15"W — Front Bookcase Upper Storage . . 109
Personal Storage Towers - 15"W — Side Bookcase Upper Storage . . . 112
Personal Storage Towers - 15"W — Hinged Door Upper Storage 117
Personal Storage Towers - 24"W — Front Bookcase Upper Storage . 120
Personal Storage Towers - 24"W — Side Bookcase Upper Storage . . 124
Personal Storage Towers - 24"W — Hinged Door Upper Storage 128

Accessories

Counterweight 132
Slim Pedestal Top Liner 133
Slim Pedestal Shelf 133
Personal Drawer 134
Hardware Kit — Height Adjustable Table Integration 135
Cable Chain 135
Bag Liner 135
Open HAT Lower Storage Shelf 136
HAT Credenza Shelf 136
Reference Ledge 137
Slat Rail 138
Tackboards 139

Table of Contents

TFL Shelf — for use with Bookcase, Storage Cabinet and Stack-On units 140
TFL Shelf — for use with Wardrobe 141
TFL Shelf — for use with Personal Storage Tower 142
Desk to Storage Bracket 143
Tower to Desk Bracket with Hook 144
Convergent Brackets 144
Worksurface-to-Storage Bracket 144
Overhead Storage Unit Ganging Tie Plate Bracket 145
Storage-to-Storage Ganging Bracket 145
Compose Panel-to-Storage Bracket — C5 Be_Hold/Be_Hold Be and A Series Credenza 146
Belong Drawer Divider 147
Belong Drawer Divider Partition 148
Belong Drawer Tray 149
Belong Drawer Liner 149
Belong Organizational Rings 149
Belong Slim C Cubby 150
Belong Slim C Cubby Divider Shelf 150
Magnetic Divider 150
Personal Tray 151
Pencil Tray 151

Resources

Fabrics and Finishes

Finish/Color Legend 154
Vertical Fabrics/Color Legend 155
Seating Fabrics/Color Legend 155

Index. 156
Lifetime Product Warranty 160

Statement of Line

Modular Lower Storage

Pages 17-64

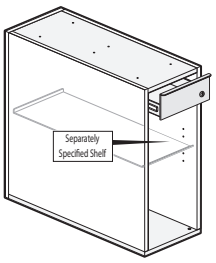

2H Slim Pedestal - Attached — Personal Drawer/Open

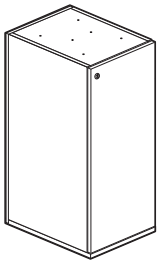

2H Slim Pedestal - Attached — Hinged Door

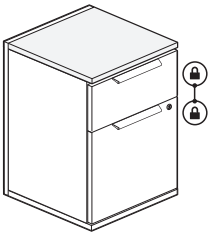

1.5H Pedestal — Drawers

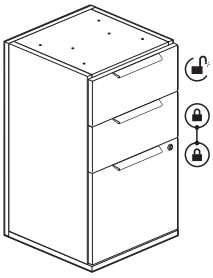

2H Pedestal - Attached — Drawers

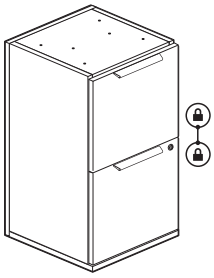

2H Pedestal - Attached — Drawers

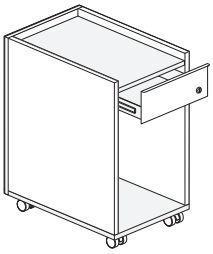

1.5H Slim Pedestal - Mobile — Personal Drawer/Open

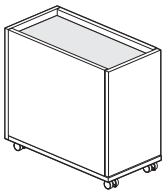

1.5H Slim Pedestal - Mobile — Hinged Door

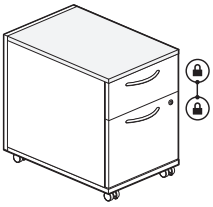

1.5H Pedestal - Mobile — Drawers

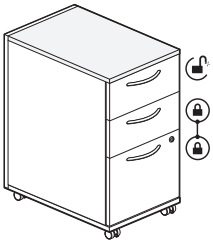

2H Pedestal - Mobile — Drawers

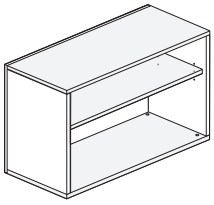

1.5H Storage Cabinet — Open

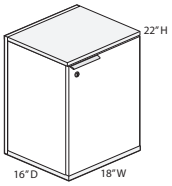

1.5H Storage Cabinet — Single Hinged Door — 18"W

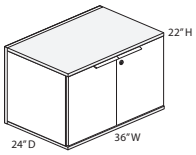

1.5H Storage Cabinet — Double Hinged Door — 24"W, 30"W, 36"W

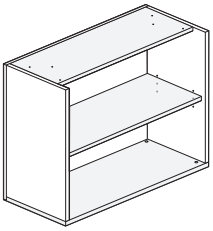

2H Storage Cabinet - Attached — Open

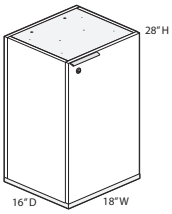

2H Storage Cabinet - Attached — Single Hinged Door — 18"W

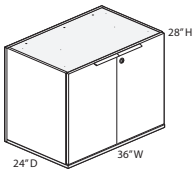

2H Storage Cabinet - Attached — Double Hinged Door — 24"W, 30"W, 36"W

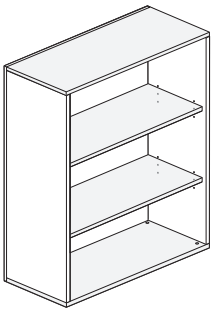

3H Storage Cabinet — Open

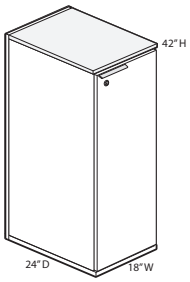

3H Storage Cabinet — Single Hinged Door — 18"W

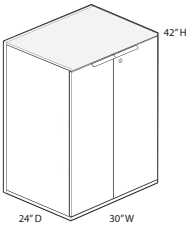

3H Storage Cabinet — Double Hinged Door — 24"W, 30"W, 36"W

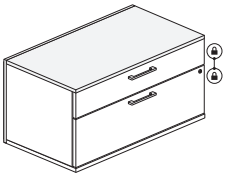

1.5H Lateral File — Box/File

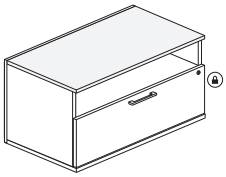

1.5H Lateral File — Open/File

Statement of Line

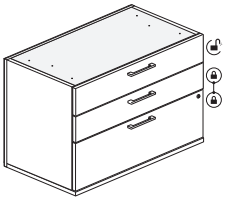

2H Lateral File - Attached — Box/Box/File

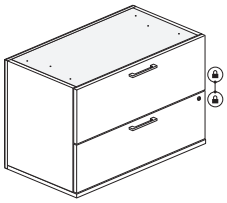

2H Lateral File - Attached — File/File

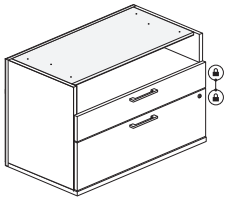

2H Lateral File - Attached — Open/Box/File

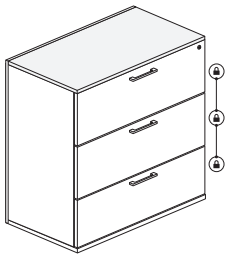

3H Lateral File — File/File/File

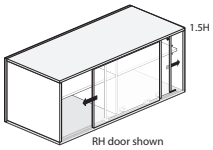

1.5H Credenza - Preconfigured — Sliding Doors

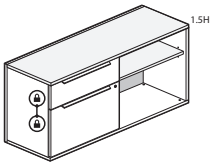

1.5H Credenza - Preconfigured — Drawers

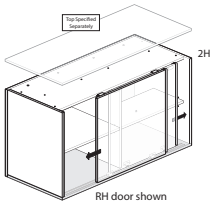

2H Credenza - Preconfigured - Attached — Sliding Doors

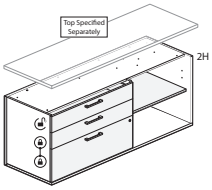

2H Credenza - Preconfigured - Attached — Drawers

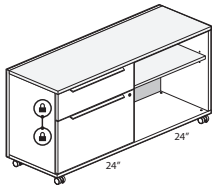

1.5H Credenza - Preconfigured - Mobile — Drawers

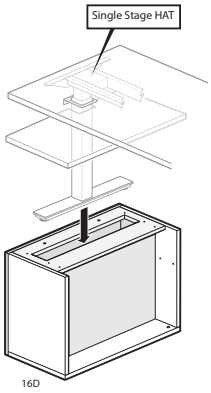

1.5H Storage for Height Adjustable Table - Preconfigured - Attached — Open Cabinet

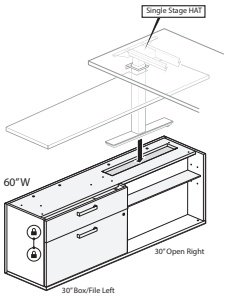

1.5H Credenza for Height Adjustable Table - Preconfigured - Attached — Drawers

Modular Lower Storage Tops

Pages 67-69

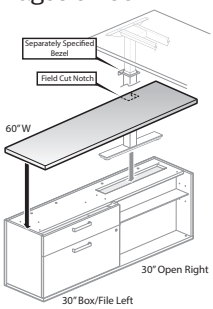

1.5H Height Adjustable Table Storage Top - Laminate - 0.75" Thick — HAT Storage Top

2H Storage Tops - Laminate - 1.18″ Thick — Pedestal Top

2H Storage Tops - Laminate - 1.18″ Thick — Filing and Storage Top

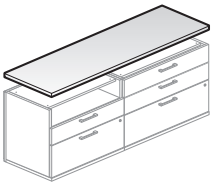

Common Top - Laminate - 1.18" Thick — Common Top

Statement of Line

Modular Lower Storage Cushions

Page 72

Cushion Top — Pedestal Cushion Top

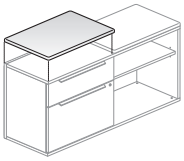

Cushion Top — Filing and Storage Cushion Top

Upper Storage

Pages 74-85

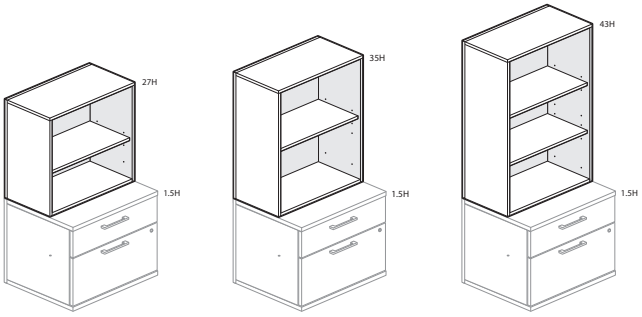

Stack-On Bookcase - for 1.5H Lower Storage — Open

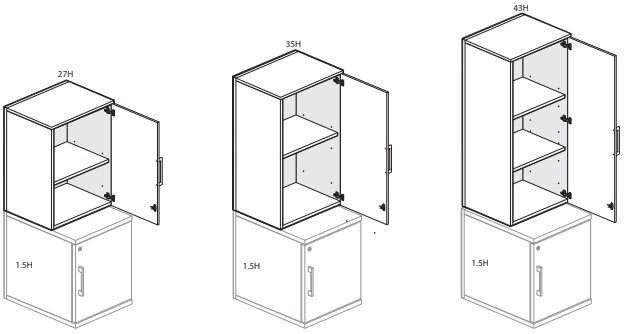

Stack-On Storage Cabinet - for 1.5H Lower Storage — Singled Hinged Door

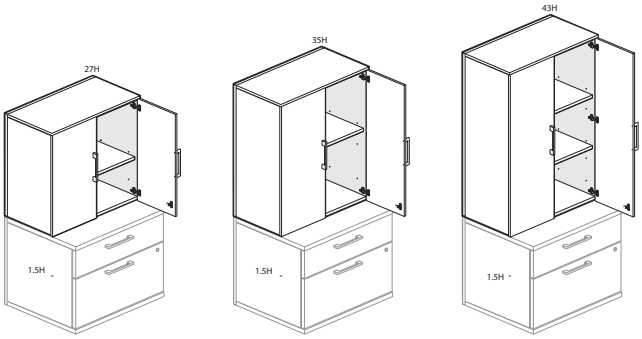

Stack-On Storage Cabinet - for 1.5H Lower Storage — Double Hinged Door

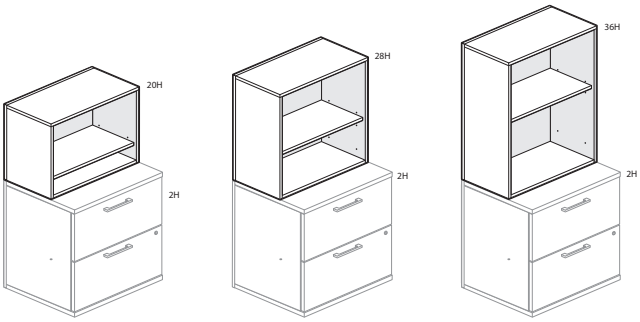

Stack-On Bookcase - for 2H Lower Storage — Open

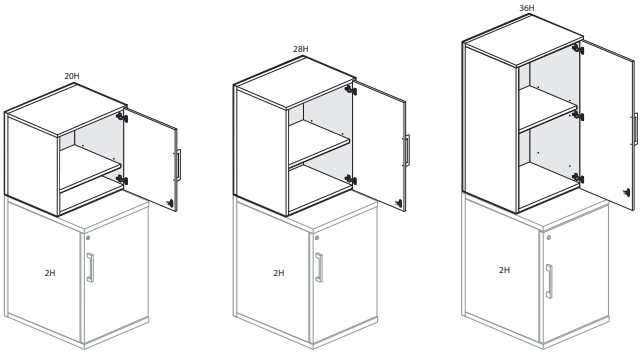

Stack-On Storage Cabinet - for 2H Lower Storage — Singled Hinged Door

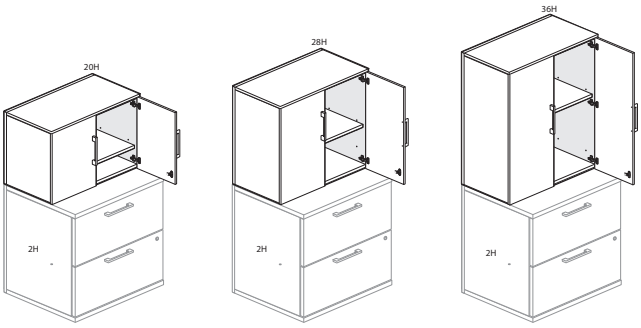

Stack-On Storage Cabinet - for 2H Lower Storage — Double Hinged Door

Statement of Line

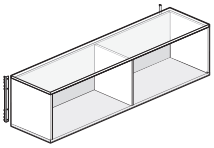

Overhead Storage Unit — Open — Single Sided

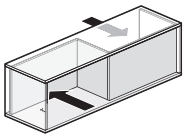

Overhead Storage Unit — Open — Dual Sided

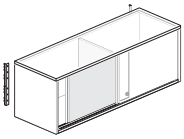

Overhead Storage Unit — Sliding Door — Single Sided

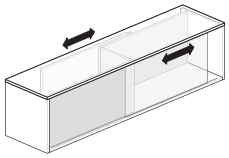

Overhead Storage Unit — Sliding Door — Dual Sided

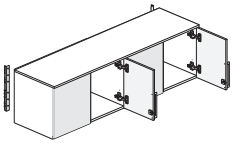

Overhead Storage Unit — Hinged Door — Single Sided

Upper Storage Support

Page 87-94

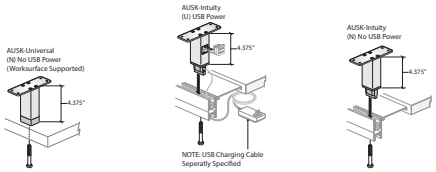

For use with Intuity Benching, Be_Hold, Be_Hold Be and A Series Storage — Stanchion

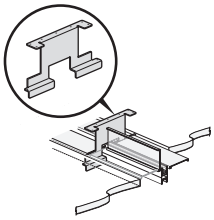

For use with Intuity Benching — Worksurface to Storage Bracket – Intuity with Access Hatch Mid-Mod Mount

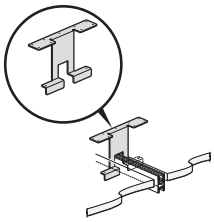

For use with Intuity Benching — Worksurface to Storage Bracket – Intuity without Access Hatch

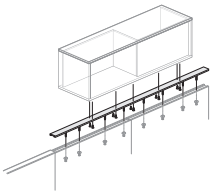

Off-Modular Rail Mounting —
For use with Compose Panels — Off-Modular Top Trim Mounting 24"(610mm)-120"(3048mm) for Compose

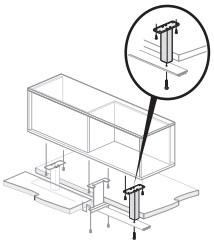

For use with Compose 26"(660mm) High Panel, Compose Connections and Compose Beam —
Centered Single Panel Mount — Stanchion for use with Standard Aluminum Top Trim

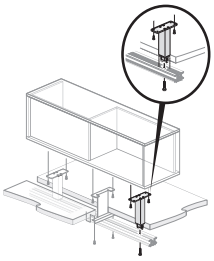

For use with Compose 26"(660mm) High Panel, Compose Connections and Compose Beam —
Centered Single Panel Mount — Stanchion for use with Work Rail Top Trim

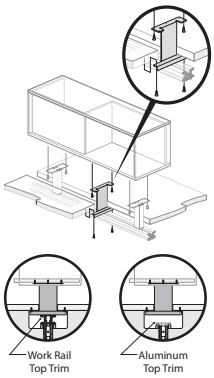

For use with Compose 26"(660mm) High Panel, Compose Connections and Compose Beam —
Centered Single Panel Mount — Worksurface to Storage Bracket – Compose 26"(660mm) High Panel, Compose Connections and Compose Beam Mount

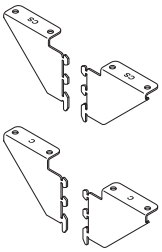

For use with Compose 26"(660mm) High Panel, Compose Connections and Compose Beam —
Centered Single Panel Mount — Top Mount Bracket

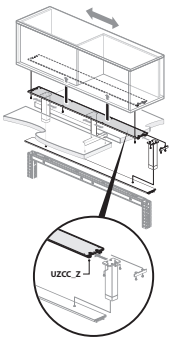

For use with Compose 26"(660mm) High Panel, Compose Connections and Compose Beam —
Off-Modular Rail Mounting —
Off-Modular Rail for mounting Compose to Be_Hold Upper Storage – Stanchion Mounted

Statement of Line

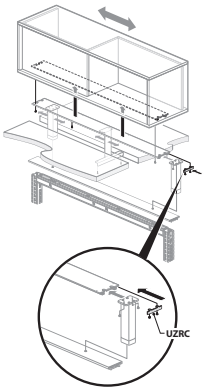

For use with Compose 26"(660mm) High Panel, Compose Connections and Compose Beam — Off-Modular Rail Mounting — End Cap, Off-Modular Rail – For use with Be_Hold Upper Storage – Stanchion Mounted

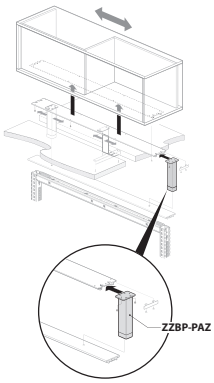

For use with Compose 26"(660mm) High Panel, Compose Connections and Compose Beam — Off-Modular Rail Mounting — Off-Modular Stanchion – For use with Standard Aluminum Top Trim

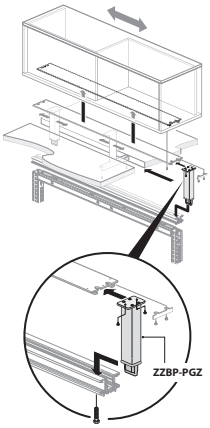

For use with Compose 26"(660mm) High Panel, Compose Connections and Compose Beam — Off-Modular Rail Mounting — Off-Modular Stanchion – For use with Work Rail Top Trim

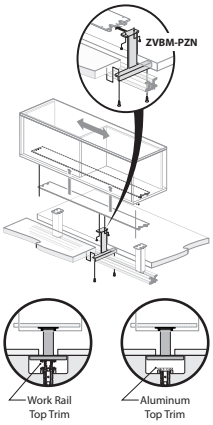

For use with Compose 26"(660mm) High Panel, Compose Connections and Compose Beam — Off-Modular Rail Mounting — Worksurface to Storage Bracket – For use with Off-Modular Rail – Compose 26"(660mm) High Panel, Compose Connections and Compose Beam

Freestanding Storage

Pages 96-131

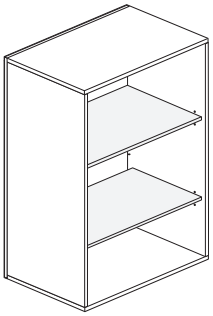

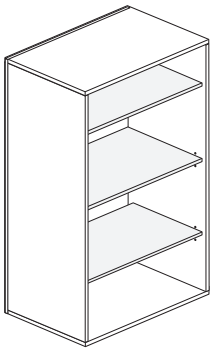

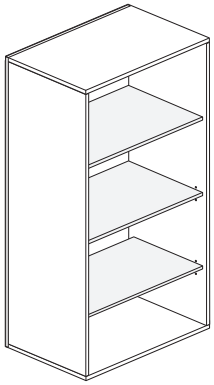

Bookcase

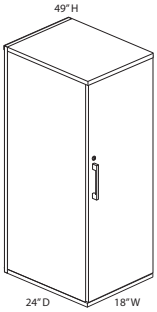

Storage Cabinet — Single Hinged Door

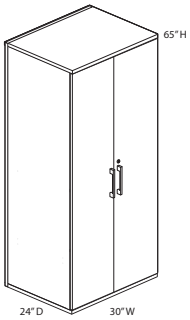

Storage Cabinet — Double Hinged Door

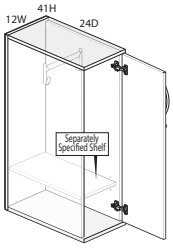

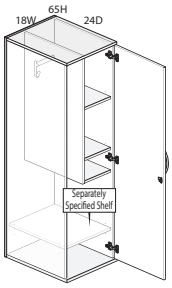

Single Hinged Door Wardrobe

Statement of Line

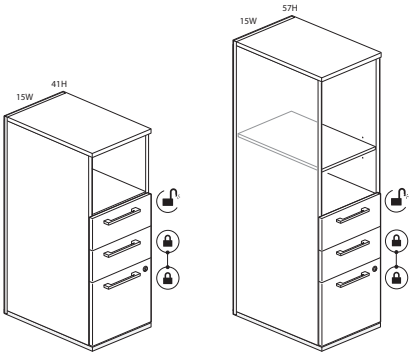

Personal Storage Towers - 15"W — Front Bookcase Upper Storage

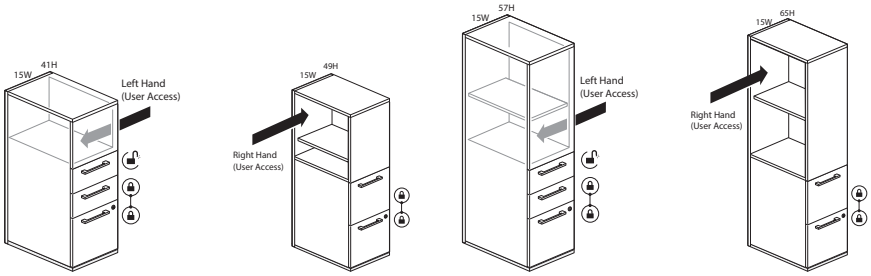

Personal Storage Towers - 15"W — Side Bookcase Upper Storage

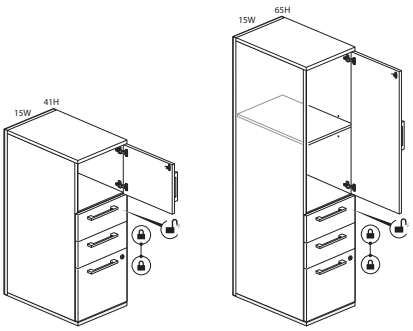

Personal Storage Towers - 15"W — Hinged Door Upper Storage

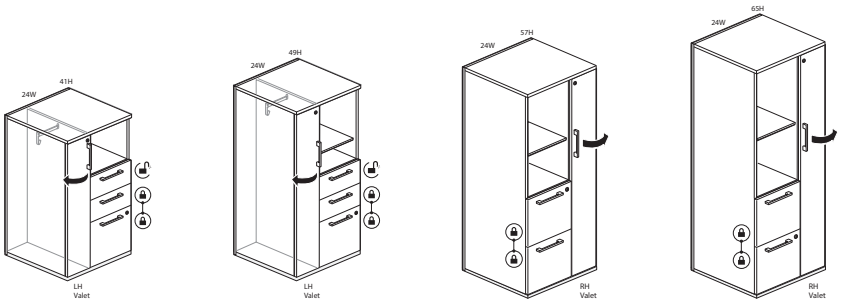

Personal Storage Towers - 24"W — Front Bookcase Upper Storage

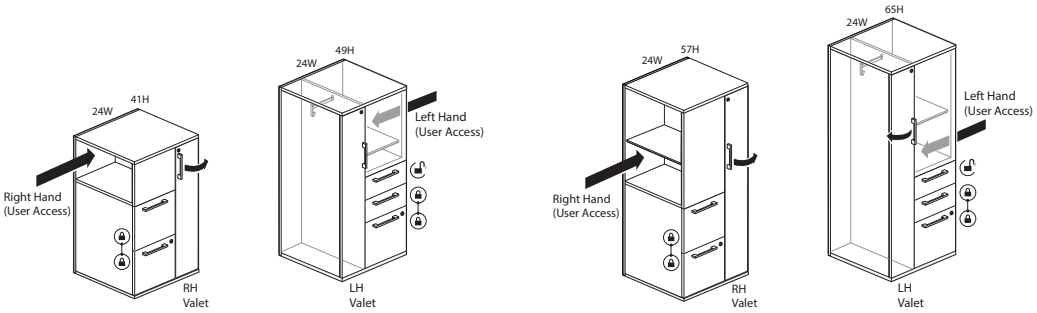

Personal Storage Towers - 24"W — Side Bookcase Upper Storage

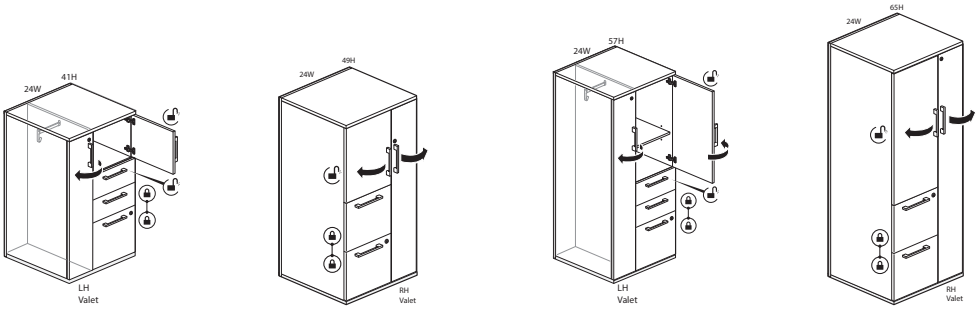

Personal Storage Towers - 24"W — Hinged Door Upper Storage

Statement of Line

Accessories

Pages 132-151

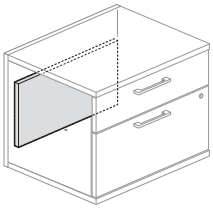

Counterweight

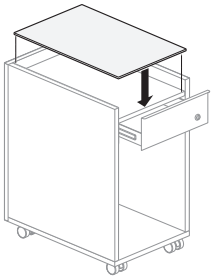

Slim Pedestal Top Liner

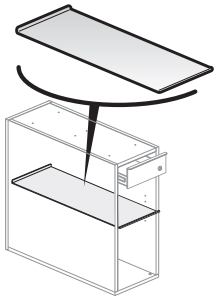

Slim Pedestal Shelf

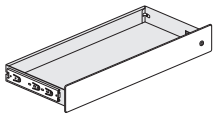

Personal Drawer

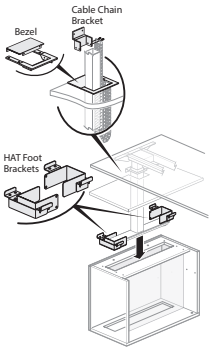

Hardware Kit —
Height Adjustable Table Integration

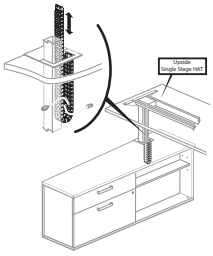

Cable Chain

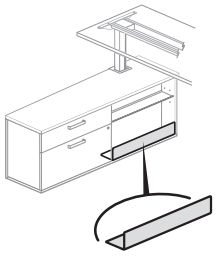

Bag Liner

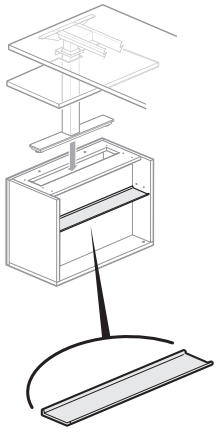

Open HAT Lower Storage Shelf

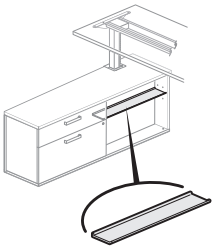

HAT Credenza Shelf

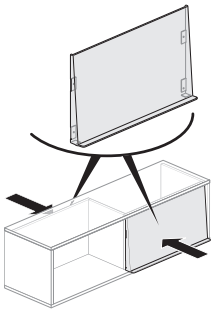

Reference Ledge

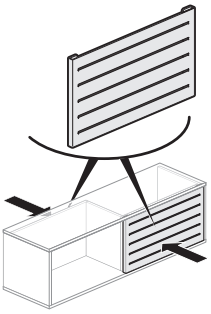

Slat Rail

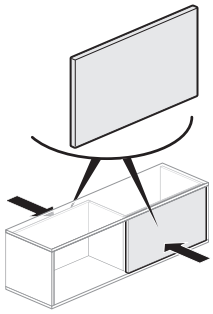

Tackboards

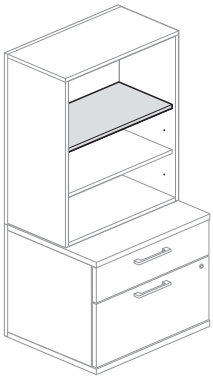

TFL Shelf — for use with Bookcase, Storage Cabinet and Stack-On units

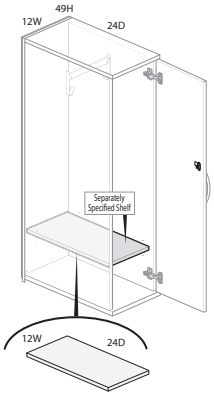

TFL Shelf — for use with Wardrobe

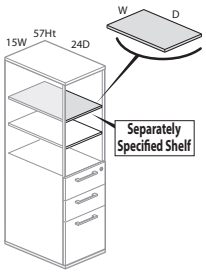

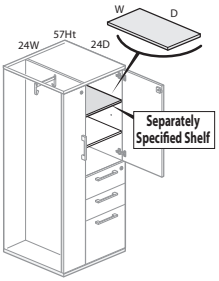

TFL Shelf — for use with Personal Storage Tower

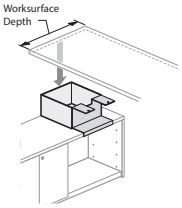

Desk to Storage Bracket

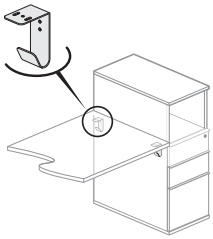

Tower to Desk Bracket with Hook

Statement of Line

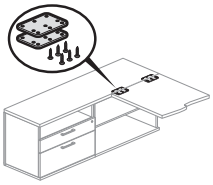

Convergent Brackets

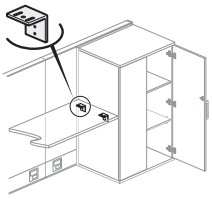

Worksurface-to-Storage Bracket

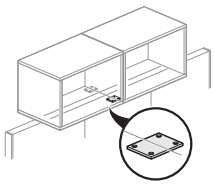

Overhead Storage Unit Ganging Tie Plate Bracket

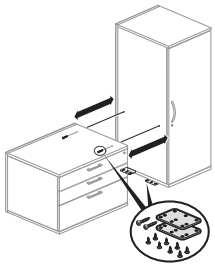

Storage-to-Storage Ganging Bracket

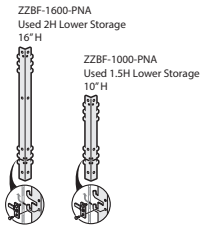

Compose Panel-to-Storage Bracket — C5 Be_Hold/Be_Hold Be and A Series Credenza

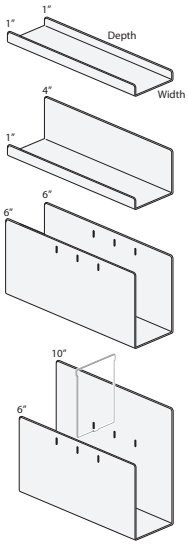

Belong Drawer Divider

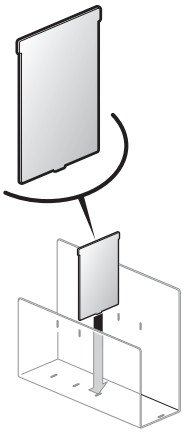

Belong Drawer Divider Partition

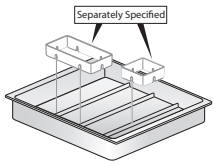

Belong Drawer Tray

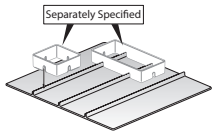

Belong Drawer Liner

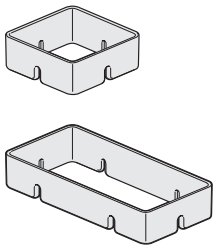

Belong Organizational Rings

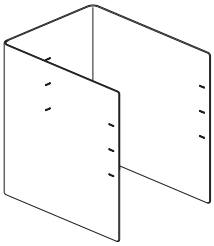

Belong Slim C Cubby

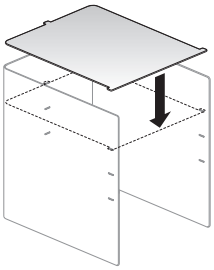

Belong Slim C Cubby Divider Shelf

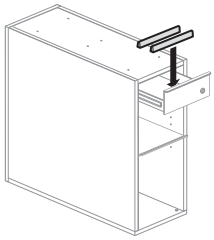

Magnetic Divider

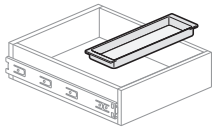

Personal Tray

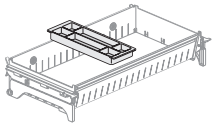

Pencil Tray

Modular Lower Storage

Pedestals

Catalog Logic

B2 P A A - 16 15 - T T B N F P 7 Y R

Product Line
(B2) Be_Hold Be

Product Type
(P) Pedestal

Pedestal Type
(A) Attached/Freestanding
(M) Mobile

Configuration
(A) Box/File
(D) Box/Open
(G) Hinged Door
(H) Box/Box/File
(J) File/File

Depth
16”
18”
24”
30”

Width
12”
15”

Case Finish Type
(T) Thermally Fused Laminate - TFL

Front Finish Type
(S) Painted Steel
(T) Thermally Fused Laminate - TFL

Drawer Construction
(B) Black Composite Wood
(S) Steel
(N) No Drawer

Handedness
(L) Left Hand
(R) Right Hand
(N) No Hand

Top Option
(F) Finished Top (2H Mobile & All 1.5H)
(U) Unfinished (2H)

Back
(P) Proud

Pull
(7) Crescent
(8) Linear
(9) Classic
(Q) Blade
(W) Wing
(N) No Pull

Lock Option
(Y) Locking
(N) No Lock

Close Type
(R) Regular Close

Modular Lower Storage

2H Slim Pedestal - Attached

Personal Drawer/Open

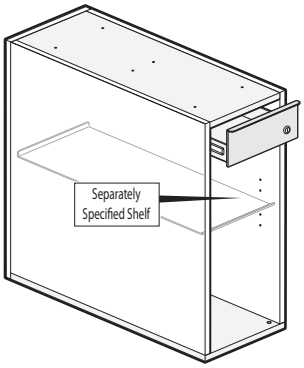

B2PAD-3012
Class BH – Open Market

Features

- Includes 12"(305mm)W attached pedestal with proud back, unfinished top, and leveling glide with 1"(25mm) adjustment range.
- 4"(102mm)H Personal Drawer/Open pedestal standard with thermally fused laminate (TFL) case and steel drawer front.
- Top is predrilled for attachment to common top or panel mounted worksurface.
- Drawer standard with finger pull.
- Drawer has full extension steel ball-bearing slides.
- Drawer interior is black finish color.
- Available locking or non-locking.
- Lock plug available in black or chrome.
- Not for use with digital locks.
- For lock options, refer to Lock Program section of the Accessories Price List.

Specification Tips

- Modular Lower Storage attached units are for use in the following applications:
  –To design a 2H modular storage credenza; requires a separately specified 1.18"(30mm) thick common top.
  –Used in conjunction with a preconfigured 2H storage credenza; requires a separately specified 1.18"(30mm) thick common top.
  –In the following panel/desking frame mounted worksurface applications:
  - Compose Panels
  - Compose Connections
  - Compose Beam
  - Intuity

  Note: Refer to the appropriate Specification Guide for product application guidelines by product line.
- Not for use with:
  –Cushions
  –As a single stand alone unit
  –Height Adjustable Tables (HAT)
  –Be_Hold Storage legs
- Personal drawer for use with separately specified accessories:
  –Drawer Liner
  –Magnetic Divider
  –Belong Organizational Ring
- A separately specified accessory shelf may be used in the open storage section; installs in designated mounting locations. See Product Details.

To Order, Specify:

1) Product number, including:

❶ **Lock Option:**
- **N** Non-Locking
- **Y** Locking (add **$43.46** list)

2) TFL color for case.
3) Trim color for drawer front.
4) Trim color for lock plug (if applicable).

Height	Depth	Width	Number	❶	Case TFL A Front TFL A	Case TFL A Front TFL B	Case TFL B Front TFL A	Case TFL B Front TFL B
28"(711mm)	16"(406mm)	12"(305mm)	B2PAD-1612-TSSNUPN	R	$ 965.61	$ 972.11	$ 984.97	$ 991.47
	18"(457mm)	12"(305mm)	B2PAD-1812-TSSNUPN	R	975.99	982.49	996.55	1003.05
	24"(610mm)	12"(305mm)	B2PAD-2412-TSSNUPN	R	1007.13	1013.63	1031.29	1037.79
	30"(762mm)	12"(305mm)	B2PAD-3012-TSSNUPN	R	1038.27	1044.77	1066.03	1072.53

Modular Lower Storage

2H Slim Pedestal - Attached

Hinged Door

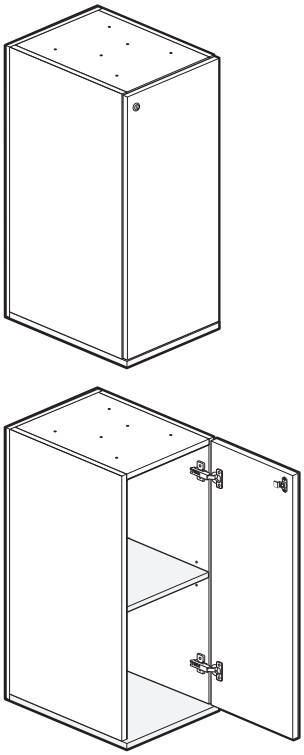

B2PAG-3012
Class BH – Open Market

Features

- Includes 12"(305mm)W attached pedestal with hinged door with concealed hinges, one adjustable shelf, unfinished top, and leveling glides with 1"(25mm) adjustment range.
- Pedestal case, shelf and hinged door are thermally fused laminate (TFL).
- Shelf TFL matches case.
- Top is predrilled for attachment to common top or panel mounted worksurface.
- Hinged door standard with touch latch and no pull.
- Available locking or non-locking.
- Lock plug available in black or chrome.
- Not for use with digital locks.
- For lock options, refer to Lock Program section of the Accessories Price List.

Specification Tips

- Modular Lower Storage attached units are for use in the following applications:
  - –To design a 2H modular storage credenza; requires a separately specified 1.18"(30mm) thick common top.
  - –Used in conjunction with a preconfigured 2H storage credenza; requires a separately specified 1.18"(30mm) thick common top.
  - –In the following panel/desking frame mounted worksurface applications:
    - Compose Panels
    - Compose Connections
    - Compose Beam
    - Intuity

  Note: Refer to the appropriate Specification Guide for product application guidelines by product line.
- Not for use with:
  - – Cushions
  - –As a single stand alone unit
  - –Height Adjustable Tables (HAT)
  - –Be_Hold Storage legs

To Order, Specify:

1) Product number, including:

❶ **Handedness:**
- **R** Right Hand
- **L** Left Hand

❷ **Lock Option:**
- **N** Non-Locking
- **Y** Locking (add **$43.46** list)

2) TFL color for case.
3) TFL color for front.
4) Trim color for lock plug (if applicable).

						Case TFL A Front TFL		Case TFL B Front TFL	
Height	**Depth**	**Width**	**Number**	❶	❷	**A**	**B**	**A**	**B**
28"(711mm)	16"(406mm)	12"(305mm)	B2PAG-1612-TTN	UPN	R	$ 899.13	$900.96	$ 918.50	$ 920.33
	18"(457mm)	12"(305mm)	B2PAG-1812-TTN	UPN	R	909.51	911.34	930.08	931.91
	24"(610mm)	12"(305mm)	B2PAG-2412-TTN	UPN	R	940.65	942.48	964.82	966.65
	30"(762mm)	12"(305mm)	B2PAG-3012-TTN	UPN	R	971.79	973.62	999.56	1001.39

Modular Lower Storage

1.5H Pedestal

Drawers

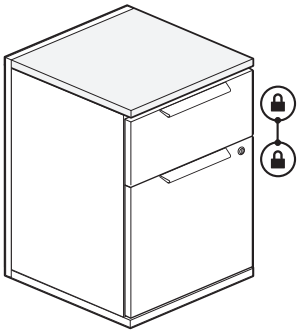

B2PAA-1615
Class BH – Open Market

Features

- Includes pedestal with finished 0.75"(19mm) thick top, and leveling glides with 1"(25mm) adjustment range.
- Pedestal case, finished top and drawer fronts are thermally fused laminate (TFL).
- Drawers have full extension steel ball-bearing slides. Drawer depth is 12"(305mm).
- Optional drawer pulls include Crescent, Linear, Classic, Blade, and Wing.
  –Crescent, Linear and Classic pulls are brushed nickel finish.
  –Blade and Wing pulls are specifiable trim color.
- Available locking or non-locking; single lock secures all drawers.
- Lock plug available in black or chrome.
- Not for use with digital locks.
- For lock options, refer to Lock Program section of the Accessories Price List.

Specification Tips

- Modular Lower Storage units are for use in the following applications:
  –To design a modular storage credenza.
  –Used in conjunction with a preconfigured storage credenza.
  –As a freestanding 1.5H pedestal.
  –In the following panel/desking frame mounted worksurface applications:
  - Compose Panels
  - Compose Connections
  - Compose Beam
  - Intuity

  Note: Refer to the appropriate Specification Guide for product application guidelines by product line.
- All 15"(381mm)W freestanding pedestals require a counterweight.
  –Use 15"(381mm)W counterweight installed horizontally (BACF-0015-S)
- Not for use with:
  –Height Adjustable Tables (HATS)
  –Be_Hold Storage legs
- 1.5H pedestal accepts separately specified storage cushion.
- Box drawer for use with separately specified accessories:
  –Drawer Liner
  –Drawer Tray
  –Drawer Dividers
  –Belong Organizational Rings
  –Personal Tray
  –Pencil Tray
- File drawer accommodates front-to-back and side-to-side letter filing. File drawer does not accommodate legal filing.

To Order, Specify:

1) Product number, including:
   ❶ **Pull Option:** (see side bar)
   ❷ **Lock Option:**
   - **N** No Lock
   - **Y** Lock (add **$43.46** list)
2) TFL color for case.
3) TFL color for front.
4) Trim color for pull (Blade and Wing).
5) Trim color for lock plug (if applicable).

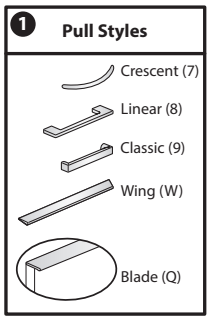

Height	Depth	Width	Pull	Number ❶❷	Case TFL A Front TFL A	Case TFL A Front TFL B	Case TFL B Front TFL A	Case TFL B Front TFL B
Box/File								
22"(559mm)	16"(406mm)	15"(381mm)	7,8,9	B2PAA-1615-TTBNFP R	$890.88	$893.38	$909.00	$ 911.50
			W	B2PAA-1615-TTBNFPW R	919.44	921.94	937.56	940.06
			Q	B2PAA-1615-TTBNFPQ R	929.82	932.32	947.94	950.44
	24"(610mm)	15"(381mm)	7,8,9	B2PAA-2415-TTBNFP R	$932.40	$934.90	$ 955.32	$ 957.82
			W	B2PAA-2415-TTBNFPW R	960.96	963.46	983.88	986.38
			Q	B2PAA-2415-TTBNFPQ R	971.34	973.84	994.26	996.76

Modular Lower Storage

2H Pedestal - Attached

Drawers

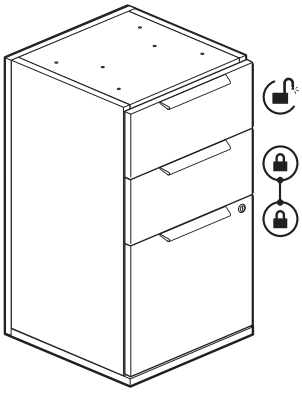

B2PAH-1615

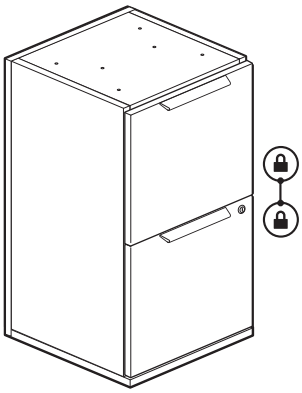

B2PAJ-1615

Class BH – Open Market

Features

- Includes attached pedestal with leveling glides with 1"(25mm) adjustment range and unfinished top.
- Pedestal case and drawer fronts are thermally fused laminate (TFL).
- Drawers have full extension steel ball-bearing slides. Drawer depth is 12"(305mm).
- Optional drawer pulls include Crescent, Linear, Classic, Blade, and Wing.
  –Crescent, Linear and Classic pulls are brushed nickel finish.
  –Blade and Wing pulls are specifiable trim color.
- Available locking or non-locking:
  –File/File single lock secures all drawers.
  –Box/Box/File standard with top drawer non-locking and single lock to secure bottom drawers.
- Lock plug available in black or chrome.
- Not for use with digital locks.
- For lock options, refer to Lock Program section of the Accessories Price List.

Specification Tips

- Modular Lower Storage attached units are for use in the following applications:
  –To design a modular storage credenza; requires a separately specified 1.18"(30mm) thick common top.
  –Used in conjunction with a preconfigured storage credenza; requires a separately specified 1.18"(30mm) thick common top.
  –As a freestanding 2H pedestal; requires a separately specified 1.18"(30mm) thick pedestal top.
  –In the following panel/desking frame mounted worksurface applications:
    - Compose Panels
    - Compose Connections
    - Compose Beam
    - Intuity

  Note: Refer to the appropriate Specification Guide for product application guidelines by product line.
- All 15"(381mm)W freestanding pedestals require a counterweight.
  –2H will use 24"(610mm)W counterweight installed vertically (BACF-0024-S)
- Not for use with:
  –Height Adjustable Tables (HAT)
  –Be_Hold Storage legs
  –Storage Cushion top
- Box drawer for use with separately specified accessories:
  –Drawer Liner
  –Drawer Tray
  –Drawer Dividers
  –Belong Organizational Rings
  –Personal Tray
  –Pencil Tray
- File drawer accommodates front-to-back and side-to-side letter filing. File drawer does not accommodate legal filing.

To Order, Specify:

1) Product number, including:

❶ **Pull Option:** (see side bar)

❷ **Lock Option:**

- **N** No Lock
- **Y** Lock (add **$43.46** list)

2) TFL color for case.
3) TFL color for front.
5) Trim color for pull (Blade and Wing).
6) Trim color for lock plug (if applicable).

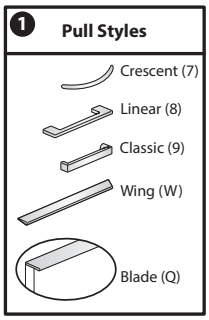

Modular Lower Storage

2H Pedestal - Attached

Height	Depth	Width	Pull	Number ❶❷	Case TFL A Front TFL A	Case TFL A Front TFL B	Case TFL B Front TFL A	Case TFL B Front TFL B
Box/Box/File								
28"(711mm)	16"(406mm)	15"(381mm)	7,8,9	B2PAH-1615-TTBNUP R	$ 891.87	$ 895.04	$ 905.82	$ 908.99
			W	B2PAH-1615-TTBNUPW R	934.71	937.88	948.66	951.83
			Q	B2PAH-1615-TTBNUPQ R	950.28	953.45	964.23	967.40
	18"(457mm)	15"(381mm)	7,8,9	B2PAH-1815-TTBNUP R	902.25	905.42	917.40	920.57
			W	B2PAH-1815-TTBNUPW R	945.09	948.26	960.24	963.41
			Q	B2PAH-1815-TTBNUPQ R	960.66	963.83	975.81	978.98
	24"(610mm)	15"(381mm)	7,8,9	B2PAH-2415-TTBNUP R	933.39	936.56	952.14	955.31
			W	B2PAH-2415-TTBNUPW R	976.23	979.40	994.98	998.15
			Q	B2PAH-2415-TTBNUPQ R	991.80	994.97	1010.55	1013.72
	30"(762mm)	15"(381mm)	7,8,9	B2PAH-3015-TTBNUP R	964.53	967.70	986.88	990.05
			W	B2PAH-3015-TTBNUPW R	1007.37	1010.54	1029.72	1032.89
			Q	B2PAH-3015-TTBNUPQ R	1022.94	1026.11	1045.29	1048.46
File/File								
28"(711mm)	16"(406mm)	15"(381mm)	7,8,9	B2PAJ-1615-TTBNUP R	$ 940.98	$ 944.15	$ 961.25	$ 964.42
			W	B2PAJ-1615-TTBNUPW R	969.54	972.71	989.81	992.98
			Q	B2PAJ-1615-TTBNUPQ R	979.92	983.09	1000.19	1003.36
	18"(457mm)	15"(381mm)	7,8,9	B2PAJ-1815-TTBNUP R	951.36	954.53	972.83	976.00
			W	B2PAJ-1815-TTBNUPW R	979.92	983.09	1001.39	1004.56
			Q	B2PAJ-1815-TTBNUPQ R	990.30	993.47	1011.77	1014.94
	24"(610mm)	15"(381mm)	7,8,9	B2PAJ-2415-TTBNUP R	982.50	985.67	1007.57	1010.74
			W	B2PAJ-2415-TTBNUPW R	1011.06	1014.23	1036.13	1039.30
			Q	B2PAJ-2415-TTBNUPQ R	1021.44	1024.61	1046.51	1049.68
	30"(762mm)	15"(381mm)	7,8,9	B2PAJ-3015-TTBNUP R	1013.64	1016.81	1042.31	1045.48
			W	B2PAJ-3015-TTBNUPW R	1042.20	1045.37	1070.87	1074.04
			Q	B2PAJ-3015-TTBNUPQ R	1052.58	1055.75	1081.25	1084.42

Modular Lower Storage

1.5H Slim Pedestal - Mobile

Personal Drawer/Open

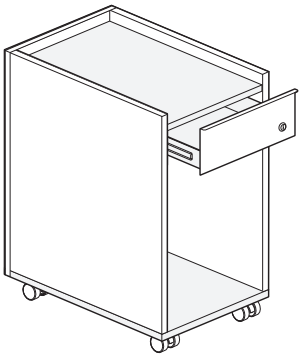

B2PMD-2412
Class BH – Open Market

Features

- Includes 12"(305mm)W mobile pedestal with proud back, 0.75"(19mm) finished TFL top, counterweight and non-locking black casters; two fixed casters in front, and two swivel casters in back.
- 4"(102mm)H Personal Drawer/Open pedestal with thermally fused laminate (TFL) case and steel drawer front.
- Drawer standard with finger pull.
- Drawer has full extension steel ball-bearing slides.
- Drawer interior is black finish color.
- Available locking or non-locking.
- Lock plug available in black or chrome.
- Not for use with digital locks.
- For lock options, refer to Lock Program section of the Accessories Price List.

Specification Tips

- For use with separately specified accessories:
  –Top Liner
  –Drawer Liner
  –Belong Organizational Rings
  –Magnetic Divider
- Not for use with a storage cushion.
- Open storage section is not for use with an accessory shelf.
- Will fit under a 29"(737mm)H Adaptable worksurface.
- Mobile pedestals may not be ganged together or to other units.

To Order, Specify:

1) Product number, including:

❶ **Lock Option:**

N Non-Locking

Y Locking (add **$43.46** list)

2) TFL color for case.
3) Trim color for drawer front.
4) Trim color for lock plug (if applicable).

					Case TFL A Front TFL		Case TFL B Front TFL	
Height	**Depth**	**Width**	**Number**	❶	**A**	**B**	**A**	**B**
22"(559mm)	18"(457mm)	12"(305mm)	B2PMD-1812-TSSNFPN	R	$ 713.54	$720.04	$ 734.10	$740.60
	24"(610mm)	12"(305mm)	B2PMD-2412-TSSNFPN	R	744.68	751.18	768.84	775.34

Modular Lower Storage

1.5H Slim Pedestal - Mobile

Hinged Door

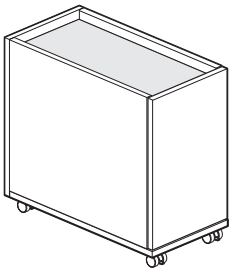

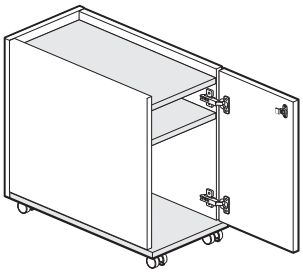

B2PMG-2412
Class BH – Open Market

Features

- Includes 12"(305mm)W mobile pedestal with proud back, finished 0.75"(19mm) thick top, hinged door with concealed hinges, one adjustable shelf, and non-locking black casters; two fixed casters in front, and two swivel casters in back.
- Pedestal case, top, shelf and hinged door are thermally fused laminate (TFL).
- Shelf TFL matches case.
- Hinged door standard with touch latch and no pull.
- Available locking or non-locking.
- Lock plug available in black or chrome.
- Not for use with digital locks.
- For lock options, refer to Lock Program section of the Accessories Price List.

Specification Tips

- For use with separately specified Top Liner.
- Height adjustable shelf inserts into designated mounting locations. See Product details.
- Not for use with Storage Cushion.
- Fits under 29"(737mm)H Adaptable worksurface.
- Mobile pedestals may not be ganged together or to other units.

To Order, Specify:

1) Product number, including:

❶ **Handedness:**
- **R** Right Hand
- **L** Left Hand

❷ **Lock Option:**
- **N** Non-Locking
- **Y** Locking (add **$43.46** list)

2) TFL color for case.
3) TFL color for front.
4) Trim color for lock plug (if applicable).

						Case TFL A Front TFL		Case TFL B Front TFL	
Height	**Depth**	**Width**	**Number**	❶	❷	**A**	**B**	**A**	**B**
22"(559mm)	18"(457mm)	12"(305mm)	B2PMG-1812-TTN	FPN	R	$720.97	$722.80	$ 741.54	$743.37
	24"(610mm)	12"(305mm)	B2PMG-2412-TTN	FPN	R	752.11	753.94	776.28	778.11

Modular Lower Storage

1.5H Pedestal - Mobile

Drawers

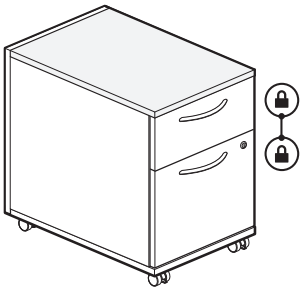

B2PMA-2415
Class BH – Open Market

Features

- Includes mobile pedestal with finished 0.75"(19mm) thick top, non-locking black casters; two fixed casters in front and two swivel casters in back and factory installed counterweight.
- Pedestal case, top, and drawer fronts are thermally fused laminate (TFL).
- Drawers have full extension steel ball-bearing slides. Drawer depth is 12"(305mm).
- Optional drawer pulls include Crescent, Linear, Classic, Blade, and Wing.
  –Crescent, Linear and Classic pulls are brushed nickel finish.
  –Blade and Wing pulls are specifiable trim color.
- Available locking or non-locking; single lock secures all drawers.
- Lock plug available in black or chrome.
- For lock options, refer to Lock Program section of the Accessories Price List.

Specification Tips

- For use with separately specified Pedestal Cushion Top.
- Box drawer for use with separately specified accessories:
  –Drawer Liner
  –Drawer Tray
  –Drawer Dividers
  –Belong Organizational Rings
  –Personal Tray
  –Pencil Tray
- File drawer accommodates front-to-back and side-to-side letter filing. File drawer does not accommodate legal filling.
- A 1.5H box/file pedestal with or without storage cushion will fit under a 29"(737mm)H Adaptable worksurface.
- Mobile pedestals may not be ganged together or to other units.

To Order, Specify:

1) Product number, including:

❶ **Pull Option:** (see side bar)

❷ **Lock Option:**

N No Lock

Y Lock (add **$43.46** list)

2) TFL color for case.
3) TFL color for front.
4) Trim color for pull (Blade and Wing).
5) Trim color for lock plug (if applicable).

❶ **Pull Styles**

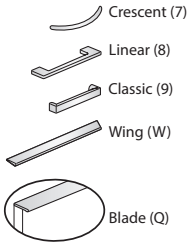

Height	Depth	Width	Pull	Number ❶❷	Case TFL A Front TFL A	Case TFL A Front TFL B	Case TFL B Front TFL A	Case TFL B Front TFL B
Box/File								
22"(559mm)	18"(457mm)	15"(381mm)	7,8,9	B2PMA-1815-TTBNFP ▢ ▢ R	$ 1037.13	$1039.63	$1056.45	$1058.95
			W	B2PMA-1815-TTBNFPW ▢ R	1065.69	1068.19	1085.01	1087.51
			Q	B2PMA-1815-TTBNFPQ ▢ R	1076.07	1078.57	1095.39	1097.89
	24"(610mm)	15"(381mm)	7,8,9	B2PMA-2415-TTBNFP ▢ ▢ R	$1068.27	$ 1070.77	$ 1091.19	$1093.69
			W	B2PMA-2415-TTBNFPW ▢ R	1096.83	1099.33	1119.75	1122.25
			Q	B2PMA-2415-TTBNFPQ ▢ R	1107.21	1109.71	1130.13	1132.63

Modular Lower Storage

2H Pedestal - Mobile

Drawers

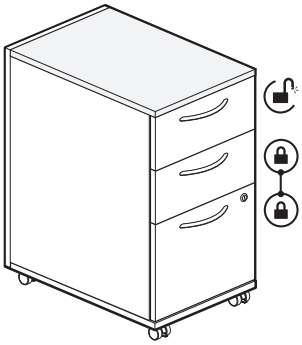

B2PMH-2415
Class BH – Open Market

Features

- Includes mobile pedestal with finished 0.75”(19mm) thick top, non-locking black casters; two fixed casters in front and two swivel casters in back and factory installed counterweight.
- Pedestal case, top, and drawer fronts are thermally fused laminate (TFL).
- Drawers have full extension steel ball-bearing slides. Drawer depth is 12”(305mm).
- Optional drawer pulls include Crescent, Linear, Classic, Blade, and Wing.
  –Crescent, Linear and Classic pulls are brushed nickel finish.
  –Blade and Wing pulls are specifiable trim color.
- Available locking or non-locking.
  –Box/Box/File standard with top drawer non-locking and single lock to secure bottom drawers.
- Lock plug available in black or chrome.
- Not for use with digital locks.
- For lock options, refer to Lock Program section of the Accessories Price List.

Specification Tips

- Box drawer for use with separately specified accessories:
  –Drawer Liner
  –Drawer Tray
  –Drawer Dividers
  –Belong Organizational Rings
  –Personal Tray
  –Pencil Tray
- File drawer accommodates front-to-back and side-to-side letter filing. File drawer does not accommodate legal filling.
- 2H mobile pedestal:
  –Nests below a 29”(737mm)H panel mounted worksurface when located adjacent to worksurface cantilever support brackets and/or worksurface support legs.
  –Nests below an Intuity Rectangular Return or Bench End that does not require a reinforcement bar or channel.
  –**Do not nest below an Intuity Rectangular or 120° Wrap Around Corner worksurface due to worksurface understructure interference.**
- Mobile pedestals may not be ganged together or to other units.

To Order, Specify:

1) Product number, including:

❶ **Pull Option:** (see side bar)

❷ **Lock Option:**

- **N** No Lock
- **Y** Lock (add **$43.46** list)

2) TFL color for case.
3) TFL color for front.
4) Trim color for pull (Blade and Wing).
5) Trim color for lock plug (if applicable).

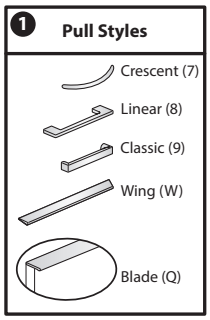

Height	Depth	Width	Pull	Number ❶❷	Case TFL A Front TFL A	Case TFL A Front TFL B	Case TFL B Front TFL A	Case TFL B Front TFL B
Box/Box/File								
28”(711mm)	18”(457mm)	15”(381mm)	7,8,9	B2PMH-1815-TTBNFP ▢ ▢ R	$1081.88	$1085.05	$1097.03	$1100.20
			W	B2PMH-1815-TTBNFPW ▢ R	1124.72	1127.89	1139.87	1143.04
			Q	B2PMH-1815-TTBNFPQ ▢ R	1140.29	1143.46	1155.44	1158.61
	24”(610mm)	15”(381mm)	7,8,9	B2PMH-2415-TTBNFP ▢ ▢ R	$ 1113.02	$ 1116.19	$ 1131.77	$ 1134.94
			W	B2PMH-2415-TTBNFPW ▢ R	1155.86	1159.03	1174.61	1177.78
			Q	B2PMH-2415-TTBNFPQ ▢ R	1171.43	1174.60	1190.18	1193.35

Modular Lower Storage

Open Cabinet

Catalog Logic

B2 B 22 N - 16 18 - T T P N N

Product Line
(B2) Be_Hold Be

Product Type
(B) Open Cabinet

Height
22”
28”
42”

Height Adjustable Table Option
(N) No Table
(X) HAT Cutout

Depth
16”
24”

Width
18”
24”
30”
36”

Case Finish Type
(T) Thermally Fused Laminate - TFL

Shelf Finish
(T) Thermally Fused Laminate - TFL

Back
(P) Proud

Height Adjustable Table Bezel
(N) No Bezel
(Y) Bezel

Power Cutout for HAT
(N) No Power Cutout
(Y) Power Cutout

Modular Lower Storage

Storage Cabinet

Catalog Logic

B2 S 22 - 16 30 - T T N P 7 Y R

Product Line
(B2) Be_Hold Be

Product Type
(S) Storage Cabinet

Height
22”
28”
42”

Depth
16”
24”

Width
18”
24”
30”
36”

Case Finish Type
(T) Thermally Fused Laminate - TFL

Front Finish Type
(T) Thermally Fused Laminate - TFL

Handedness
(L) Left Hand
(R) Right Hand
(N) No Hand

Back
(P) Proud

Pull
(7) Crescent
(8) Linear
(9) Classic
(W) Wing
(N) No Pull

Lock Option
(Y) Locking
(N) No Lock

Close Type
(R) Regular Close

Modular Lower Storage

1.5H Storage Cabinet

Open

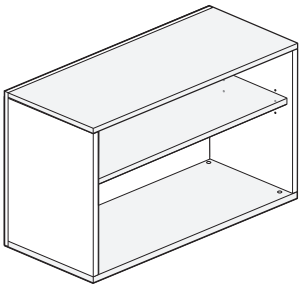

B2B22N-1630
Class BH – Open Market

Features

- Includes one thermally fused laminate (TFL) case, one adjustable TFL shelf, glides and finished 0.75"(19mm) thick top.
- TFL shelf matches case.
- Glides provide 1"(25mm) leveling adjustment range.

Specification Tips

- 1.5H Modular Lower Storage units are for use in the following applications:
  –As a single storage unit.
  –To design a modular credenza.
  –Used in conjunction with a preconfigured credenza.
  –To support one end of a fixed height Convergent Worksurface; requires separately specified Desk to Storage Bracket and floor support for opposite end.
- Height adjustable shelf inserts into designated mounting locations. See Product Details.
- For use with separately specified Filing and Storage Cushion Top **or** same width Stack-On Storage For Use With 1.5H Lower Storage.
- Personal Drawer may be used under modular storage top; separately specified.
- Not for use with:
  –Be_Hold Storage legs
- Refer to Specification Guide for product application information.

To Order, Specify:

1) Product number.
2) TFL color.

Height	Depth	Width	Number	TFL A	B
22"(559mm)	16"(406mm)	18"(457mm)	B2B22N-1618-TTPNN	$ 679.41	$694.63
		24"(610mm)	B2B22N-1624-TTPNN	731.05	749.88
		30"(762mm)	B2B22N-1630-TTPNN	782.69	805.13
		36"(914mm)	B2B22N-1636-TTPNN	818.44	843.38
	24"(610mm)	18"(457mm)	B2B22N-2418-TTPNN	$766.84	$ 788.13
		24"(610mm)	B2B22N-2424-TTPNN	830.40	856.13
		30"(762mm)	B2B22N-2430-TTPNN	893.96	924.13
		36"(914mm)	B2B22N-2436-TTPNN	953.55	987.88

Modular Lower Storage

1.5H Storage Cabinet

Single Hinged Door — 18”W

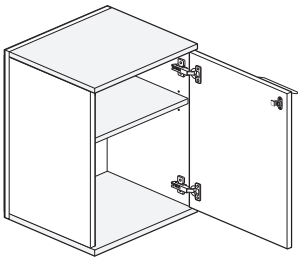

RH door shown

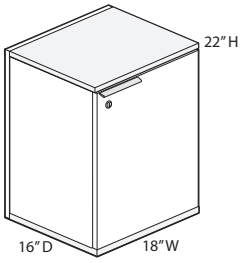

B2S22-1618
Class BH – Open Market

Features

- Includes thermally fused laminate (TFL) storage cabinet with one adjustable shelf, glides, concealed hinges and finished 0.75”(19mm) thick top.
- Shelf is TFL and matches cabinet.
- Glides provide 1”(25mm) leveling adjustment.
- Standard with one right or left hand thermally fused laminate (TFL) door.
- Door pull options include Crescent, Linear, Classic, and Wing. Touch latch (no pull) option also available.
  –Crescent, Linear and Classic pulls are brushed nickel finish.
  –Wing pull available as specifiable trim color.
- Available locking or non-locking.
- Lock plug available in black or chrome.
- Not for use with digital locks.
- For lock options, refer to Lock Program section of the Accessories Price List.

Specification Tips

- 1.5H Modular Lower Storage units are for use in the following applications:
  –As a single storage unit.
  –To design a modular credenza.
  –Used in conjunction with a preconfigured credenza.
- Height adjustable shelf inserts into designated mounting locations. See Product Details.
- For use with separately specified Filing and Storage Cushion Top **or** same width Stack-On Storage For Use With 1.5H Lower Storage.
- Not for use with Be_Hold Storage legs.
- Refer to Specification Guide for product application information.

To Order, Specify:

1) Product number, including:

❶ **Door Handedness:**
- **L** Left Hand
- **R** Right Hand

❷ **Pull Option:** (see side bar)

❸ **Lock Option:**
- **N** No Lock
- **Y** Lock (add **$43.46** list)

2) TFL color for case.
3) TFL color for front.
4) Trim color for Wing pull (if applicable).
5) Trim color for lock plug (if applicable).

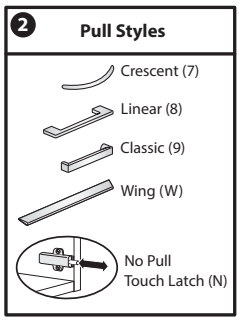

Height	Depth	Width	Pull	Number ❶❷❸	Case TFL A Front TFL A	Case TFL A Front TFL B	Case TFL B Front TFL A	Case TFL B Front TFL B
22”(559mm)	16”(406mm)	18”(457mm)	N	B2S22-1618-TT PN R	$ 661.16	$664.35	$673.89	$ 677.08
			7,8,9	B2S22-1618-TT P R	667.74	670.93	680.47	683.66
			W	B2S22-1618-TT PW R	682.22	685.41	694.95	698.14
	24”(610mm)	18”(457mm)	N	B2S22-2418-TT PN R	$ 779.61	$782.80	$ 797.11	$800.30
			7,8,9	B2S22-2418-TT P R	786.19	789.38	803.69	806.88
			W	B2S22-2418-TT PW R	800.67	803.86	818.17	821.36

Modular Lower Storage

1.5H Storage Cabinet

Double Hinged Door — 24”W, 30”W, 36”W

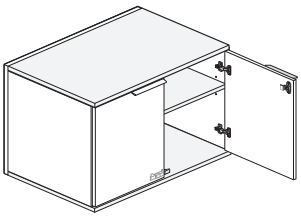

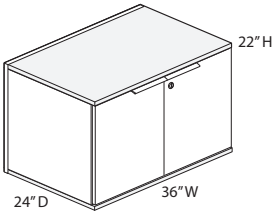

B2S22-2436

Class BH – Open Market

Features

- Includes thermally fused laminate (TFL) storage cabinet with one adjustable shelf, glides, concealed hinges and finished 0.75”(19mm) thick top.
- Shelf is TFL and matches cabinet.
- Glides provide 1”(25mm) leveling adjustment.
- Standard with two thermally fused laminate (TFL) doors.
- Door pull options include Crescent, Linear, Classic, and Wing. Touch latch (no pull) option also available.
  –Crescent, Linear and Classic pulls are brushed nickel finish.
  –Wing pull available as specifiable trim color.
- Available locking or non-locking. Single lock secures both doors.
- Lock plug available in black or chrome.
- Not for use with digital locks.
- For lock options, refer to Lock Program section of the Accessories Price List.

Specification Tips

- 1.5H Modular Lower Storage units are for use in the following applications:
  –As a single storage unit.
  –To design a modular credenza.
  –Used in conjunction with a preconfigured credenza.
- Height adjustable shelf inserts into designated mounting locations. See Product Details.
- For use with separately specified Filing and Storage Cushion Top **or** same width Stack-On Storage For Use With 1.5H Lower Storage.
- Not for use with Be_Hold Storage Legs.
- Refer to Specification Guide for product application information.

To Order, Specify:

1) Product number, including:

❶ **Pull Option:** (see side bar)

❷ **Lock Option:**

- **N** No Lock
- **Y** Lock (add **$43.46** list)

2) TFL color for case.
3) TFL color for front.
4) Trim color for Wing pull (if applicable).
5) Trim color for lock plug (if applicable).

❶ **Pull Styles**

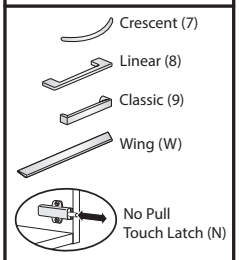

Height	Depth	Width	Pull	Number ❶❷	Case TFL A Front TFL A	Case TFL A Front TFL B	Case TFL B Front TFL A	Case TFL B Front TFL B
22”(559mm)	16”(406mm)	24”(610mm)	N	B2S22-1624-TTNPN R	$ 783.53	$ 787.88	$ 799.91	$ 804.26
			7,8,9	B2S22-1624-TTNP R	809.86	814.21	826.24	830.59
			W	B2S22-1624-TTNPW R	838.82	843.17	855.20	859.55
		30”(762mm)	N	B2S22-1630-TTNPN R	905.90	911.41	925.93	931.44
			7,8,9	B2S22-1630-TTNP R	932.23	937.74	952.26	957.77
			W	B2S22-1630-TTNPW R	961.19	966.70	981.22	986.73
		36”(914mm)	N	B2S22-1636-TTNPN R	992.74	999.12	1015.30	1021.68
			7,8,9	B2S22-1636-TTNP R	1019.07	1025.45	1041.63	1048.01
			W	B2S22-1636-TTNPW R	1048.03	1054.41	1070.59	1076.97
	24”(610mm)	24”(610mm)	N	B2S22-2424-TTNPN R	$ 921.73	$ 926.08	$ 943.71	$ 948.06
			7,8,9	B2S22-2424-TTNP R	948.06	952.41	970.04	974.39
			W	B2S22-2424-TTNPW R	977.02	981.37	999.00	1003.35
		30”(762mm)	N	B2S22-2430-TTNPN R	1063.85	1069.36	1090.31	1095.82
			7,8,9	B2S22-2430-TTNP R	1090.18	1095.69	1116.64	1122.15
			W	B2S22-2430-TTNPW R	1119.14	1124.65	1145.60	1151.11
		36”(914mm)	N	B2S22-2436-TTNPN R	1190.19	1196.57	1220.84	1227.22
			7,8,9	B2S22-2436-TTNP R	1216.52	1222.90	1247.17	1253.55
			W	B2S22-2436-TTNPW R	1245.48	1251.86	1276.13	1282.51

Modular Lower Storage

2H Storage Cabinet - Attached

Open

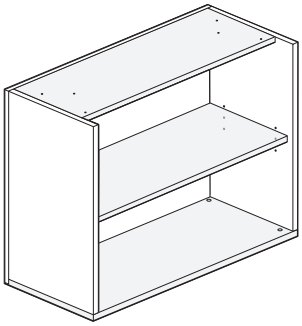

B2B28N-1630
Class BH – Open Market

Features

- Includes one thermally fused laminate (TFL) case, one adjustable TFL shelf, glides and unfinished top.
- TFL shelf matches case.
- Top is predrilled to accept a separately specified Modular Storage Top or Common Top.
- Glides provide 1"(25mm) leveling adjustment range.

Specification Tips

- 2H Attached Modular Lower Storage units are for use in the following applications:
  - –As a single storage unit; requires a separately specified 1.18"(30mm) thick Modular Storage Top.
  - –To design a modular credenza; requires a separately specified 1.18"(30mm) thick Common Top.
  - –Used in conjunction with a preconfigured 2H credenza; requires a separately specified 1.18"(30mm) thick Common Top.
  - –In a Compose, Compose Connections and Compose Beam panel/frame mounted worksurface application.
  - –To support one end of a fixed height Convergent Worksurface; requires two separately specified Convergent Worksurface Brackets (ZBBC-0000-SN) and floor support for opposite end.
- Height adjustable shelf inserts into designated mounting locations. See Product Details.
- Not for use with:
  - –Storage Cushion Top
  - –Be_Hold Storage legs
- May be used with Stack-On Storage For Use With 2H Lower Storage; Stack-On storage and attached modular lower storage must be the same width. Requires separately specified storage top.
- In a non-convergent application a separately specified Personal Drawer may be used under modular storage top.
- Refer to Specification Guide for product application information.

To Order, Specify:

1) Product number.
2) TFL color.

Height	Depth	Width	Number	TFL A	B
28"(711mm)	16"(406mm)	18"(457mm)	B2B28N-1618-TTPNN	$638.49	$656.20
		24"(610mm)	B2B28N-1624-TTPNN	694.10	715.70
		30"(762mm)	B2B28N-1630-TTPNN	749.71	775.20
		36"(914mm)	B2B28N-1636-TTPNN	789.43	817.70
	24"(610mm)	18"(457mm)	B2B28N-2418-TTPNN	$ 733.87	$ 758.20
		24"(610mm)	B2B28N-2424-TTPNN	801.40	830.45
		30"(762mm)	B2B28N-2430-TTPNN	868.93	902.70
		36"(914mm)	B2B28N-2436-TTPNN	932.49	970.70

Modular Lower Storage

2H Storage Cabinet - Attached

Single Hinged Door — 18”W

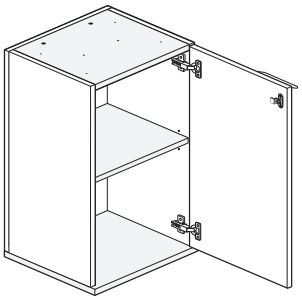

RH door shown

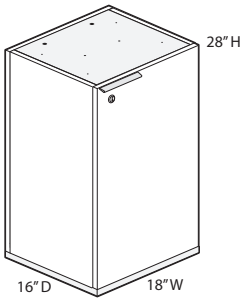

B2S28-1618

Class BH – Open Market

Features

- Includes thermally fused laminate (TFL) storage cabinet with one adjustable shelf, glides, concealed hinges and unfinished top.
- Shelf is TFL and matches cabinet.
- Glides provide 1”(25mm) leveling adjustment.
- Standard with one right or left hand thermally fused laminate (TFL) door.
- Door pull options include Crescent, Linear, Classic, and Wing. Touch latch (no pull) option also available.
  –Crescent, Linear and Classic pulls are brushed nickel finish.
  –Wing pull available as specifiable trim color.
- Unfinished top is predrilled to accept separately specified Modular Storage Top or Common Top.
- Available locking or non-locking.
- Lock plug available in black or chrome.
- Not for use with digital lock.
- For lock options, refer to Lock Program section of the Accessories Price List.

Specification Tips

- 2H Attached Modular Lower Storage units are for use in the following applications:
  –As a single storage unit; requires a separately specified 1.18”(30mm) thick Modular Storage Top.
  –To design a credenza; requires a separately specified 1.18”(30mm) thick Common Top.
  –Used in conjunction with a preconfigured 2H credenza; requires a separately specified 1.18”(30mm) thick Common Top.
  –In a Compose, Compose Connections and Compose Beam panel/frame mounted worksurface application.
- Height adjustable shelf inserts into designated mounting locations. See Product Details.
- Not for use with:
  –Storage Cushion Top
  –Be_Hold Storage legs
- May be used with same width Stack-On Storage For Use With 2H Lower Storage. Requires separately specified Modular Storage Top or Common Top.
- Refer to Specification Guide for product application information.

To Order, Specify:

1) Product number, including:

❶ **Door Handedness:**
- **L** Left Hand
- **R** Right Hand

❷ **Pull Option:** (see side bar)

❸ **Lock Option:**
- **N** No Lock
- **Y** Lock (add **$43.46** list)

2) TFL color for case.
3) TFL Color for front.
4) Trim color for Wing pull (if applicable).
5) Trim color for lock plug (if applicable).

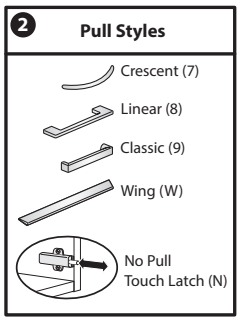

Height	Depth	Width	Pull	Number ❶❷❸	Case TFL A Front TFL A	Case TFL A Front TFL B	Case TFL B Front TFL A	Case TFL B Front TFL B
28”(711mm)	16”(406mm)	18”(457mm)	N	B2S28-1618-TT PN R	$ 732.17	$736.23	$746.64	$750.70
			7,8,9	B2S28-1618-TT P R	738.75	742.81	753.22	757.28
			W	B2S28-1618-TT PW R	753.23	757.29	767.70	771.76
	24”(610mm)	18”(457mm)	N	B2S28-2418-TT PN R	$ 858.51	$862.57	$878.04	$ 882.10
			7,8,9	B2S28-2418-TT P R	865.09	869.15	884.62	888.68
			W	B2S28-2418-TT PW R	879.57	883.63	899.10	903.16

Modular Lower Storage

2H Storage Cabinet - Attached

Double Hinged Door — 24”W, 30”W, 36”W

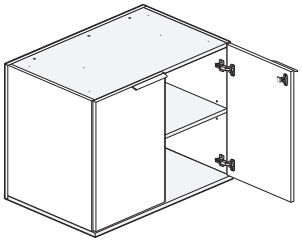

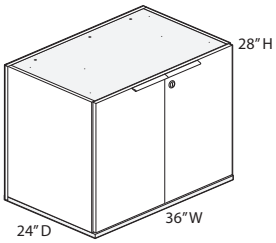

B2S28-2436

Class BH – Open Market

Features

- Includes thermally fused laminate (TFL) storage cabinet with one adjustable shelf, glides, concealed hinges and unfinished top.
- Shelf is TFL and matches cabinet.
- Glides provide 1”(25mm) leveling adjustment.
- Standard with two thermally fused laminate (TFL) doors.
- Door pull options include Crescent, Linear, Classic, and Wing. Touch latch (no pull) option also available.
  –Crescent, Linear and Classic pulls are brushed nickel finish.
  –Wing pull available as specifiable trim color.
- Unfinished top is predrilled to accept separately specified Modular Storage Top or Common Top.
- Available locking or non-locking. Single lock secures both doors.
- Lock plug available in black or chrome.
- Not for use with digital locks.
- For lock options, refer to Lock Program section of the Accessories Price List.

Specification Tips

- 2H Attached Modular Lower Storage units are for use in the following applications:
  –As a single storage unit; requires a separately specified 1.18”(30mm) thick Modular Storage Top.
  –To design a credenza; requires a separately specified 1.18”(30mm) thick Common Top.
  –Used in conjunction with a preconfigured 2H credenza; requires a separately specified 1.18”(30mm) thick Common Top.
  –In a Compose, Compose Connections and Compose Beam panel/frame mounted worksurface application.
- Height adjustable shelf inserts into designated mounting locations. See Product Details.
- Not for use with:
  –Storage Cushion Top
  –Be_Hold Storage legs
- May be used with same width Stack-On Storage For Use With 2H Lower Storage. Modular Storage Top or Common Top required; separately specified.
- Refer to Specification Guide for product application information.

To Order, Specify:

1) Product number, including:

❶ **Pull Option:** (see side bar)

❷ **Lock Option:**

N No Lock

Y Lock (add **$43.46** list)

2) TFL color for case.
3) TFL color for front.
4) Trim color for Wing pull (if applicable).
5) Trim color for lock plug (if applicable).

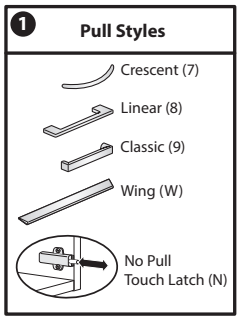

Height	Depth	Width	Pull	Number ❶❷	Case TFL A Front TFL A	Case TFL A Front TFL B	Case TFL B Front TFL A	Case TFL B Front TFL B
28”(711mm)	16”(406mm)	24”(610mm)	N	B2S28-1624-TTNPN R	$ 870.32	$ 875.83	$ 888.73	$ 894.24
			7,8,9	B2S28-1624-TTNP R	896.65	902.16	915.06	920.57
			W	B2S28-1624-TTNPW R	925.61	931.12	944.02	949.53
		30”(762mm)	N	B2S28-1630-TTNPN R	1008.47	1015.43	1030.82	1037.78
			7,8,9	B2S28-1630-TTNP R	1034.80	1041.76	1057.15	1064.11
			W	B2S28-1630-TTNPW R	1063.76	1070.72	1086.11	1093.07
		36”(914mm)	N	B2S28-1636-TTNPN R	1111.09	1119.21	1136.26	1144.38
			7,8,9	B2S28-1636-TTNP R	1137.42	1145.54	1162.59	1170.71
			W	B2S28-1636-TTNPW R	1166.38	1174.50	1191.55	1199.67
	24”(610mm)	24”(610mm)	N	B2S28-2424-TTNPN R	$ 1016.41	$ 1021.92	$ 1040.71	$1046.22
			7,8,9	B2S28-2424-TTNP R	1042.74	1048.25	1067.04	1072.55
			W	B2S28-2424-TTNPW R	1071.70	1077.21	1096.00	1101.51
		30”(762mm)	N	B2S28-2430-TTNPN R	1174.31	1181.27	1203.38	1210.34
			7,8,9	B2S28-2430-TTNP R	1200.64	1207.60	1229.71	1236.67
			W	B2S28-2430-TTNPW R	1229.60	1236.56	1258.67	1265.63
		36”(914mm)	N	B2S28-2436-TTNPN R	1316.43	1324.55	1349.98	1358.10
			7,8,9	B2S28-2436-TTNP R	1342.76	1350.88	1376.31	1384.43
			W	B2S28-2436-TTNPW R	1371.72	1379.84	1405.27	1413.39

Modular Lower Storage

3H Storage Cabinet

Open

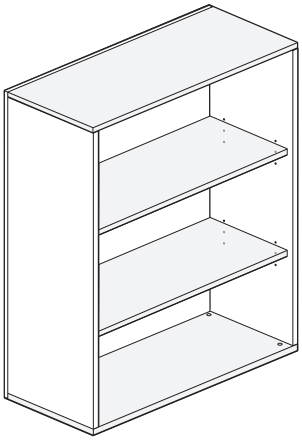

B2B42N-1630
Class BH – Open Market

Features

- Includes one thermally fused laminate (TFL) case, two adjustable TFL shelves, glides and finished 0.75"(19mm) thick top.
- TFL shelves matches case.
- Glides provide 1"(25mm) leveling adjustment range.

Specification Tips

- 3H Modular Lower Storage units are for use in the following application:
  –As a single storage unit.
  –To design a standing height credenza.
- Height adjustable shelves insert into designated mounting locations. See Product Details.
- 3H modular storage unit aligns with other Be_Hold Be 3H units however, will not horizontally align with 41"(1041mm)H Freestanding Storage.
- For use with separately specified Personal Drawer. Installation would be under modular storage top.
- Not for use with:
  –Be_Hold Storage legs
  –Accessory shelf
- Refer to Specification Guide for product application information.

To Order, Specify:

1) Product number.
2) TFL color.

Height	Depth	Width	Number	TFL A	TFL B
42"(1067mm)	16"(406mm)	18"(457mm)	B2B42N-1618-TTPNN	$ 713.98	$ 736.95
		24"(610mm)	B2B42N-1624-TTPNN	777.53	804.95
		30"(762mm)	B2B42N-1630-TTPNN	841.08	872.95
		36"(914mm)	B2B42N-1636-TTPNN	892.71	928.20
	24"(610mm)	18"(457mm)	B2B42N-2418-TTPNN	$ 833.21	$ 864.45
		24"(610mm)	B2B42N-2424-TTPNN	908.68	945.20
		30"(762mm)	B2B42N-2430-TTPNN	984.15	1025.95
		36"(914mm)	B2B42N-2436-TTPNN	1059.62	1106.70

Modular Lower Storage

3H Storage Cabinet

Single Hinged Door — 18”W

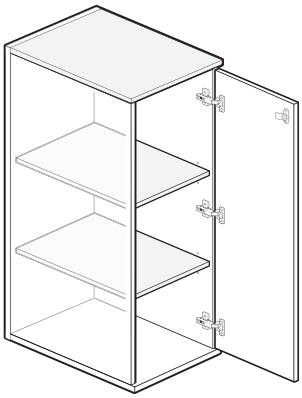

RH door shown

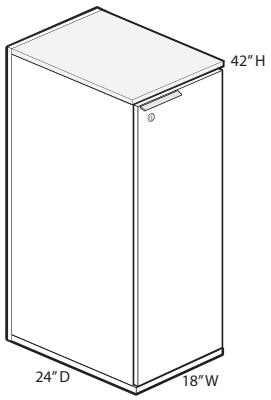

B2S42-2418

Class BH – Open Market

Features

- Includes thermally fused laminate (TFL) storage cabinet with two adjustable shelves, glides, concealed hinges and finished 0.75”(19mm) thick top.
- Shelves are TFL and match cabinet.
- Glides provide 1”(25mm) leveling adjustment.
- Standard with one right or left hand thermally fused laminate (TFL) door.
- Door pull options include Crescent, Linear, Classic, and Wing. Touch latch (no pull) option also available.
  –Crescent, Linear and Classic pulls are brushed nickel finish.
  –Wing pull available as specifiable trim color.
- Available locking or non-locking.
- Lock plug available in black or chrome.
- Not or use with digital locks.
- For lock options, refer to Lock Program section of the Accessories Price List.

Specification Tips

- 3H Modular Lower Storage units are for use in the following application:
  –As a single storage unit.
  –To design a standing height credenza.
- Height adjustable shelves insert into designated mounting locations. See Product Details.
- 3H modular storage unit aligns with other Be_Hold Be 3H units however, will not horizontally align with 41”(1041mm)H Freestanding Storage.
- Not for use with Be_Hold Storage legs.
- Refer to Specification Guide for product application information.

To Order, Specify:

1) Product number, including:

❶ **Door Handedness:**
- **L** Left Hand
- **R** Right Hand

❷ **Pull Option:** (see side bar)

❸ **Lock Option:**
- **N** No Lock
- **Y** Lock (add **$43.46** list)

2) TFL color for case.
3) TFL color for front.
4) Trim color for Wing pull (if applicable).
5) Trim color for lock plug (if applicable).

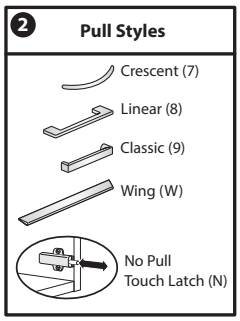

Height	Depth	Width	Pull	Number ❶❷❸	Case TFL A Front TFL A	Case TFL A Front TFL B	Case TFL B Front TFL A	Case TFL B Front TFL B
42”(1067mm)	16”(406mm)	18”(457mm)	N	B2S42-1618-TT PN R	$ 889.97	$ 896.06	$ 908.21	$ 914.30
			7,8,9	B2S42-1618-TT P R	896.55	902.64	914.79	920.88
			W	B2S42-1618-TT PW R	911.03	917.12	929.27	935.36
	24”(610mm)	18”(457mm)	N	B2S42-2418-TT PN R	$1039.98	$1046.07	$1064.15	$1070.24
			7,8,9	B2S42-2418-TT P R	1046.56	1052.65	1070.73	1076.82
			W	B2S42-2418-TT PW R	1061.04	1067.13	1085.21	1091.30

Modular Lower Storage

3H Storage Cabinet

Double Hinged Door — 24”W, 30”W, 36”W

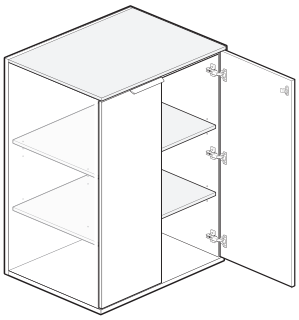

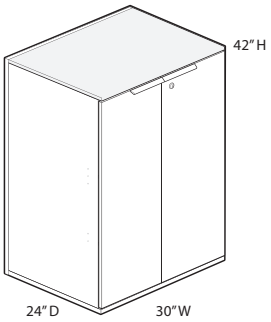

B2S42-2430

Class BH – Open Market

Features

- Includes thermally fused laminate (TFL) storage cabinet with two adjustable shelves, glides, concealed hinges and finished 0.75”(19mm) thick top.
- Shelf is TFL and matches cabinet.
- Glides provide 1”(25mm) leveling adjustment.
- Standard with two thermally fused laminate (TFL) doors.
- Door pull options include Crescent, Linear, Classic, and Wing. Touch latch (no pull) option also available.
  –Crescent, Linear and Classic pulls are brushed nickel finish.
  –Wing pull available as specifiable trim color.
- Available locking or non-locking. Single lock secures both doors.
- Lock plug available in black or chrome.
- Not for use with digital locks.
- For lock options, refer to Lock Program section of the Accessories Price List.

Specification Tips

- 3H Modular Lower Storage units are for use in the following application:
  –As a single storage unit.
  –To design a standing height credenza.
- Height adjustable shelf inserts into designated mounting locations. See Product Details.
- 3H modular storage unit aligns with other Be_Hold Be 3H units however, will not horizontally align with 41”(1041mm)H Freestanding Storage.
- Not for use with Be_Hold Storage legs.
- Refer to Specification Guide for product application information.

To Order, Specify:

1) Product number, including:

❶ **Pull Option:** (see side bar)

❷ **Lock Option:**

N No Lock

Y Lock (add **$43.46** list)

2) TFL color for case.
3) TFL color for front.
4) Trim color for Wing pull (if applicable).
5) Trim color for lock plug (if applicable).

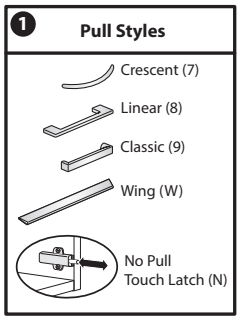

Height	Depth	Width	Pull	Number ❶❷	Case TFL A Front TFL A	Case TFL A Front TFL B	Case TFL B Front TFL A	Case TFL B Front TFL B
42”(1067mm)	16”(406mm)	24”(610mm)	N	B2S42-1624-TTNPN R	$1059.68	$1067.80	$1082.44	$1090.56
			7,8,9	B2S42-1624-TTNP R	1086.01	1094.13	1108.77	1116.89
			W	B2S42-1624-TTNPW R	1114.97	1123.09	1137.73	1145.85
		30”(762mm)	N	B2S42-1630-TTNPN R	1229.39	1239.54	1256.67	1266.82
			7,8,9	B2S42-1630-TTNP R	1255.72	1265.87	1283.00	1293.15
			W	B2S42-1630-TTNPW R	1284.68	1294.83	1311.96	1322.11
		36”(914mm)	N	B2S42-1636-TTNPN R	1379.35	1391.53	1410.32	1422.50
			7,8,9	B2S42-1636-TTNP R	1405.68	1417.86	1436.65	1448.83
			W	B2S42-1636-TTNPW R	1434.64	1446.82	1465.61	1477.79
	24”(610mm)	24”(610mm)	N	B2S42-2424-TTNPN R	$1229.44	$1237.56	$1258.96	$1267.08
			7,8,9	B2S42-2424-TTNP R	1255.77	1263.89	1285.29	1293.41
			W	B2S42-2424-TTNPW R	1284.73	1292.85	1314.25	1322.37
		30”(762mm)	N	B2S42-2430-TTNPN R	1418.90	1429.05	1453.77	1463.92
			7,8,9	B2S42-2430-TTNP R	1445.23	1455.38	1480.10	1490.25
			W	B2S42-2430-TTNPW R	1474.19	1484.34	1509.06	1519.21
		36”(914mm)	N	B2S42-2436-TTNPN R	1608.36	1620.54	1648.58	1660.76
			7,8,9	B2S42-2436-TTNP R	1634.69	1646.87	1674.91	1687.09
			W	B2S42-2436-TTNPW R	1663.65	1675.83	1703.87	1716.05

Modular Lower Storage

Lateral File

Catalog Logic

B2 L A A - 16 24 - T T B P 7 Y R

Product Line
(B2) Be_Hold Be

Product Type
(L) Lateral File

Lateral File Type
(A) Attached/Freestanding

Lateral File Configuration
1.5H
(A) Box/File
(V) Open/File
2H
(C) Open/Box/File
(H) Box/Box/File
(J) File/File
3H
(K) File/File/File

Depth
16”
24”

Width
24”
30”
36”
42”

Case Finish Type
(T) Thermally Fused Laminate - TFL

Front Finish Type
(T) Thermally Fused Laminate - TFL

Drawer Construction
(B) Black Composite Wood

Back
(P) Proud

Pull
(7) Crescent
(8) Linear
(9) Classic
(Q) Blade
(W) Wing

Lock Option
(Y) Locking
(N) No Lock

Close Type
(R) Regular Close

Modular Lower Storage

1.5H Lateral File

Box/File

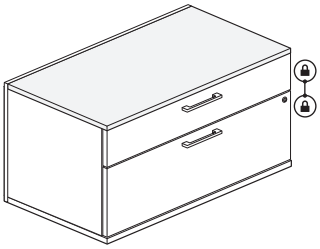

B2LAA-1642
Class BH – Open Market

Features

- Includes thermally fused laminate (TFL) lateral file with finished 0.75"(19mm) thick top, and leveling glides with 1"(25mm) adjustment range.
- File drawer standard with hanging side bars.
- Drawer has thermally fused laminate (TFL) drawer front.
- Drawers have full extension steel ball-bearing slides. Drawer depth is 12"(305mm).
- Drawer pull options include Crescent, Linear, Classic, Blade and Wing.
  –Crescent, Linear and Classic pulls are brushed nickel finish.
  –Blade and Wing pulls available as specifiable trim color.
- Available locking or non-locking; single lock secures both drawers.
- Lock plug available in black or chrome.
- Not for use with digital locks.
- For lock options, refer to Lock Program section of the Accessories Price List.

Specification Tips

- 1.5H Modular Lower Storage units are for use in the following applications:
  –As a single storage unit.
  –To design a credenza.
  –Used in conjunction with a preconfigured credenza.
- In a freestanding application lateral files require a separately specified counterweight.
- For use with:
  –Filing and Storage Cushion Top
  –Same width Stack-On Storage For Use With 1.5H Lower Storage
- Not for use with Be_Hold Storage legs.
- Box drawer for use with separately specified accessories.
  –Drawer Tray
  –Drawer Liner
  –Drawer Dividers
  –Organizational Rings
  –Personal Tray
  –Pencil Tray
- File drawer accommodates front-to-back and side-to-side letter filing and front-to-back legal filing with included hanging bars.
- Refer to Specification Guide for product application information.

To Order, Specify:

1) Product number, including:

❶ **Pull Option:** (see side bar)

❷ **Lock Option:**

N No Lock

Y Lock (add **$43.46** list)

2) TFL color for case.
3) TFL color for front.
4) Trim color for pull (Blade and Wing).
5) Trim color for lock plug (if applicable).

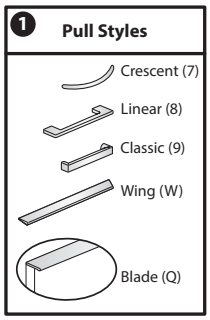

Height	Depth	Width	Pull	Number ❶❷	Case TFL A Front TFL A	Case TFL A Front TFL B	Case TFL B Front TFL A	Case TFL B Front TFL B
Box/File								
22"(559mm)	16"(406mm)	24"(610mm)	7,8,9	B2LAA-1624-TTBP ▢ ▢ R	$ 1155.73	$ 1159.93	$ 1186.25	$ 1190.45
			W	B2LAA-1624-TTBPW ▢ R	1186.51	1190.71	1217.03	1221.23
			Q	B2LAA-1624-TTBPQ ▢ R	1197.01	1201.21	1227.53	1231.73
		30"(762mm)	7,8,9	B2LAA-1630-TTBP ▢ ▢ R	1286.97	1292.22	1319.23	1324.48
			W	B2LAA-1630-TTBPW ▢ R	1317.75	1323.00	1350.01	1355.26
			Q	B2LAA-1630-TTBPQ ▢ R	1328.25	1333.50	1360.51	1365.76
		36"(914mm)	7,8,9	B2LAA-1636-TTBP ▢ ▢ R	1332.37	1338.67	1358.78	1365.08
			W	B2LAA-1636-TTBPW ▢ R	1363.15	1369.45	1389.56	1395.86
			Q	B2LAA-1636-TTBPQ ▢ R	1373.65	1379.95	1400.06	1406.36
		42"(1067mm)	7,8,9	B2LAA-1642-TTBP ▢ ▢ R	1515.41	1522.76	1542.60	1549.95
			W	B2LAA-1642-TTBPW ▢ R	1546.19	1553.54	1573.38	1580.73
			Q	B2LAA-1642-TTBPQ ▢ R	1556.69	1564.04	1583.88	1591.23

Modular Lower Storage

1.5H Lateral File

Height	Depth	Width	Pull	Number ❶❷	Case TFL A Front TFL A	Case TFL A Front TFL B	Case TFL B Front TFL A	Case TFL B Front TFL B
Box/File								
22"(559mm)	24"(610mm)	24"(610mm)	7,8,9	B2LAA-2424-TTBP R	$ 1293.41	$ 1297.61	$ 1332.79	$1336.99
			W	B2LAA-2424-TTBPW R	1324.19	1328.39	1363.57	1367.77
			Q	B2LAA-2424-TTBPQ R	1334.69	1338.89	1374.07	1378.27
		30"(762mm)	7,8,9	B2LAA-2430-TTBP R	1424.65	1429.90	1465.77	1471.02
			W	B2LAA-2430-TTBPW R	1455.43	1460.68	1496.55	1501.80
			Q	B2LAA-2430-TTBPQ R	1465.93	1471.18	1507.05	1512.30
		36"(914mm)	7,8,9	B2LAA-2436-TTBP R	1470.05	1476.35	1505.32	1511.62
			W	B2LAA-2436-TTBPW R	1500.83	1507.13	1536.10	1542.40
			Q	B2LAA-2436-TTBPQ R	1511.33	1517.63	1546.60	1552.90
		42"(1067mm)	7,8,9	B2LAA-2442-TTBP R	1653.09	1660.44	1689.14	1696.49
			W	B2LAA-2442-TTBPW R	1683.87	1691.22	1719.92	1727.27
			Q	B2LAA-2442-TTBPQ R	1694.37	1701.72	1730.42	1737.77

Modular Lower Storage

1.5H Lateral File

Open/File

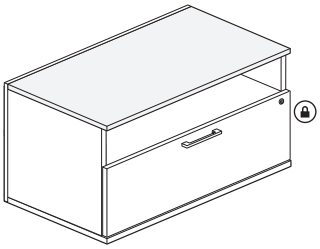

B2LAV-1642
Class BH – Open Market

Features

- Includes thermally fused laminate (TFL) lateral file with finished 0.75"(19mm) thick top, and leveling glides with 1"(25mm) adjustment range.
- File drawer standard with hanging side bars.
- Drawer has thermally fused laminate (TFL) drawer front.
- Drawer has full extension steel ball-bearing slides. Drawer depth is 12"(305mm).
- Drawer pull options include Crescent, Linear, Classic, Blade and Wing.
  –Crescent, Linear and Classic pulls are brushed nickel finish.
  –Blade and Wing pulls available as specifiable trim color.
- Bottom panel of open section is TFL and will match case.
- Available locking or non-locking.
- Lock plug available in black or chrome.
- Not for use with digital locks.
- For lock options, refer to Lock Program section of the Accessories Price List.

Specification Tips

- 1.5H Modular Lower Storage units are for use in the following applications:
  –As a single storage unit.
  –To design a credenza.
  –Used in conjunction with a preconfigured credenza.
- In a freestanding application lateral file requires a separately specified counterweight.
- For use with:
  –Filing and Storage Cushion Top
  –Same width Stack-On storage For Use With 1.5H Lower Storage
- File drawer accommodates front-to-back and side-to-side letter filing and front-to-back legal filing with use of included hanging bars.
- Not for use with:
  –Personal Drawer
- Refer to Specification Guide for product application information.

To Order, Specify:

1) Product number, including:

❶ **Pull Option:** (see side bar)

❷ **Lock Option:**

N No Lock

Y Lock (add **$43.46** list)

2) TFL color for case.
3) TFL color for front.
4) Trim color for pull (Blade and Wing).
5) Trim color for lock plug (if applicable).

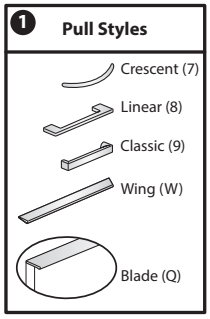

Height	Depth	Width	Pull	Number ❶❷	Case TFL A Front TFL A	Case TFL A Front TFL B	Case TFL B Front TFL A	Case TFL B Front TFL B
Open/File								
22"(559mm)	16"(406mm)	24"(610mm)	7,8,9	B2LAV-1624-TTBP ▢ ▢ R	$ 1063.51	$1065.83	$ 1106.35	$ 1108.67
			W	B2LAV-1624-TTBPW ▢ R	1078.90	1081.22	1121.74	1124.06
			Q	B2LAV-1624-TTBPQ ▢ R	1084.15	1086.47	1126.99	1129.31
		30"(762mm)	7,8,9	B2LAV-1630-TTBP ▢ ▢ R	1191.31	1194.21	1238.97	1241.87
			W	B2LAV-1630-TTBPW ▢ R	1206.70	1209.60	1254.36	1257.26
			Q	B2LAV-1630-TTBPQ ▢ R	1211.95	1214.85	1259.61	1262.51
		36"(914mm)	7,8,9	B2LAV-1636-TTBP ▢ ▢ R	1233.27	1236.75	1278.16	1281.64
			W	B2LAV-1636-TTBPW ▢ R	1248.66	1252.14	1293.55	1297.03
			Q	B2LAV-1636-TTBPQ ▢ R	1253.91	1257.39	1298.80	1302.28
		42"(1067mm)	7,8,9	B2LAV-1642-TTBP ▢ ▢ R	1412.87	1416.93	1461.62	1465.68
			W	B2LAV-1642-TTBPW ▢ R	1428.26	1432.32	1477.01	1481.07
			Q	B2LAV-1642-TTBPQ ▢ R	1433.51	1437.57	1482.26	1486.32
22"(559mm)	24"(610mm)	24"(610mm)	7,8,9	B2LAV-2424-TTBP ▢ ▢ R	$ 1201.19	$ 1203.51	$ 1252.89	$ 1255.21
			W	B2LAV-2424-TTBPW ▢ R	1216.58	1218.90	1268.28	1270.60
			Q	B2LAV-2424-TTBPQ ▢ R	1221.83	1224.15	1273.53	1275.85
		30"(762mm)	7,8,9	B2LAV-2430-TTBP ▢ ▢ R	1328.99	1331.89	1385.51	1388.41
			W	B2LAV-2430-TTBPW ▢ R	1344.38	1347.28	1400.90	1403.80
			Q	B2LAV-2430-TTBPQ ▢ R	1349.63	1352.53	1406.15	1409.05
		36"(914mm)	7,8,9	B2LAV-2436-TTBP ▢ ▢ R	1370.95	1374.43	1424.70	1428.18
			W	B2LAV-2436-TTBPW ▢ R	1386.34	1389.82	1440.09	1443.57
			Q	B2LAV-2436-TTBPQ ▢ R	1391.59	1395.07	1445.34	1448.82
		42"(1067mm)	7,8,9	B2LAV-2442-TTBP ▢ ▢ R	1550.55	1554.61	1608.16	1612.22
			W	B2LAV-2442-TTBPW ▢ R	1565.94	1570.00	1623.55	1627.61
			Q	B2LAV-2442-TTBPQ ▢ R	1571.19	1575.25	1628.80	1632.86

Modular Lower Storage

2H Lateral File - Attached

Box/Box/File

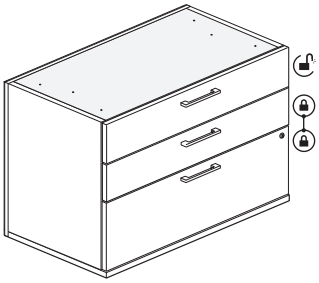

B2LAH-1642
Class BH – Open Market

Features

- Includes thermally fused laminate (TFL) lateral file with unfinished inset top, and leveling glides with 1"(25mm) adjustment range.
- File drawer standard with hanging side bars.
- Drawers have thermally fused laminate (TFL) drawer fronts.
- Drawers have full extension steel ball-bearing slides. Drawer depth is 12"(305mm).
- Drawer pull options include Crescent, Linear, Classic, Blade and Wing.
  –Crescent, Linear and Classic pulls are brushed nickel finish.
  –Blade and Wing pulls available as specifiable trim color.
- Unfinished top is predrilled to accept Modular Storage Top or Common Top.
- Available locking or non-locking; Box/Box/File standard with top drawer non-locking and single lock to secure bottom drawers.
- Lock plug available in black or chrome.
- Not for use with digital locks.
- For lock options, refer to Lock Program section of the Accessories Price List.

Specification Tips

- 2H Attached Modular Lower Storage units are for use in the following applications:
  –As a single storage unit; requires a separately specified 1.18"(30mm) thick Modular Storage Top.
  –To design a modular credenza; requires a separately specified 1.18"(30mm) thick Common Top.
  –Used in conjunction with a preconfigured 2H credenza; requires a separately specified 1.18"(30mm) thick Common Top.
  –In a Compose, Compose Connections and Compose Beam panel/frame mounted worksurface application.
- 16"(406mm)D 2H lateral files require a separately specified counterweight when used as a freestanding unit. 24"(610mm)D units do not require a counterweight.
- Not for use with:
  –Storage Cushion Top
  –Be_Hold Storage legs
- May be used with same width Stack-On Storage For Use With 2H Lower Storage. Requires separately specified 1.18"(25mm) thick storage top.
- Box drawer for use with separately specified accessories.
  –Drawer Tray
  –Drawer Liner
  –Drawer Dividers
  –Organizational Rings
  –Personal Tray
  –Pencil Tray
- File drawer accommodates front-to-back and side-to-side letter filing and front-to-back legal filing with included hanging bars.
- Refer to Specification Guide for product application information.

To Order, Specify:

1) Product number, including:
   ❶ **Pull Option:** (see side bar)
   ❷ **Lock Option:**
   N No Lock
   Y Lock (add **$43.46** list)
2) TFL color for case.
3) TFL color for front.
4) Trim color for pull (Blade and Wing).
5) Trim color for lock plug (if applicable).

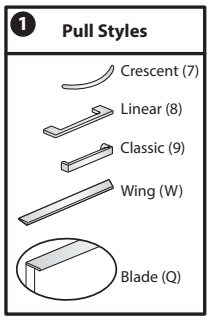

Height	Depth	Width	Pull	Number ❶❷	Case TFL A Front TFL A	Case TFL A Front TFL B	Case TFL B Front TFL A	Case TFL B Front TFL B
Box/Box/File								
28"(711mm)	16"(406mm)	24"(610mm)	7,8,9	B2LAH-1624-TTBP ▢ ▢ R	$ 1300.19	$ 1304.91	$1333.40	$ 1338.12
			W	B2LAH-1624-TTBPW ▢ R	1346.36	1351.08	1379.57	1384.29
			Q	B2LAH-1624-TTBPQ ▢ R	1362.11	1366.83	1395.32	1400.04
		30"(762mm)	7,8,9	B2LAH-1630-TTBP ▢ ▢ R	1438.31	1444.21	1473.26	1479.16
			W	B2LAH-1630-TTBPW ▢ R	1484.48	1490.38	1519.43	1525.33
			Q	B2LAH-1630-TTBPQ ▢ R	1500.23	1506.13	1535.18	1541.08
		36"(914mm)	7,8,9	B2LAH-1636-TTBP ▢ ▢ R	1486.44	1493.52	1515.54	1522.62
			W	B2LAH-1636-TTBPW ▢ R	1532.61	1539.69	1561.71	1568.79
			Q	B2LAH-1636-TTBPQ ▢ R	1548.36	1555.44	1577.46	1584.54
		42"(1067mm)	7,8,9	B2LAH-1642-TTBP ▢ ▢ R	1672.21	1680.47	1702.09	1710.35
			W	B2LAH-1642-TTBPW ▢ R	1718.38	1726.64	1748.26	1756.52
			Q	B2LAH-1642-TTBPQ ▢ R	1734.13	1742.39	1764.01	1772.27

Modular Lower Storage

2H Lateral File - Attached

Height	Depth	Width	Pull	Number ❶❷	Case TFL A Front TFL A	Case TFL A Front TFL B	Case TFL B Front TFL A	Case TFL B Front TFL B
Box/Box/File								
28"(711mm)	24"(610mm)	24"(610mm)	7,8,9	B2LAH-2424-TTBP R	$ 1437.87	$1442.59	$1479.94	$1484.66
			W	B2LAH-2424-TTBPW R	1484.04	1488.76	1526.11	1530.83
			Q	B2LAH-2424-TTBPQ R	1499.79	1504.51	1541.86	1546.58
		30"(762mm)	7,8,9	B2LAH-2430-TTBP R	1575.99	1581.89	1619.80	1625.70
			W	B2LAH-2430-TTBPW R	1622.16	1628.06	1665.97	1671.87
			Q	B2LAH-2430-TTBPQ R	1637.91	1643.81	1681.72	1687.62
		36"(914mm)	7,8,9	B2LAH-2436-TTBP R	1624.12	1631.20	1662.08	1669.16
			W	B2LAH-2436-TTBPW R	1670.29	1677.37	1708.25	1715.33
			Q	B2LAH-2436-TTBPQ R	1686.04	1693.12	1724.00	1731.08
		42"(1067mm)	7,8,9	B2LAH-2442-TTBP R	1809.89	1818.15	1848.63	1856.89
			W	B2LAH-2442-TTBPW R	1856.06	1864.32	1894.80	1903.06
			Q	B2LAH-2442-TTBPQ R	1871.81	1880.07	1910.55	1918.81

Modular Lower Storage

2H Lateral File - Attached

File/File

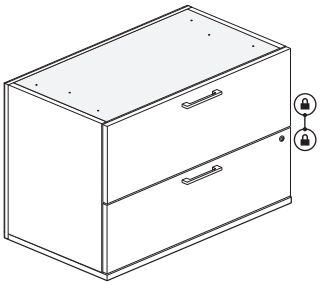

B2LAJ-1642
Class BH – Open Market

Features

- Includes thermally fused laminate (TFL) lateral file with unfinished inset top, and leveling glides with 1"(25mm) adjustment range.
- File drawers standard with hanging side bars.
- Drawers have thermally fused laminate (TFL) drawer fronts.
- Drawers have full extension steel ball-bearing slides. Drawer depth is 12"(305mm).
- Drawer pull options include Crescent, Linear, Classic, Blade and Wing.
  –Crescent, Linear and Classic pulls are brushed nickel finish.
  –Blade and Wing pulls available as specifiable trim color.
- Unfinished top is predrilled to accept Modular Storage Top or Common Top.
- Available locking or non-locking; single lock secures both drawers.
- Lock plug available in black or chrome.
- Not for use with digital locks.
- For lock options, refer to Lock Program section of the Accessories Price List.

Specification Tips

- 2H Attached Modular Lower Storage units are for use in the following applications:
  –As a single storage unit; requires a separately specified 1.18"(30mm) thick Modular Storage Top.
  –To design a modular credenza; requires a separately specified 1.18"(30mm) thick Common Top.
  –Used in conjunction with a preconfigured 2H credenza; requires a separately specified 1.18"(30mm) thick Common Top.
  –In a Compose, Compose Connections and Compose Beam panel/frame mounted worksurface application.
- 16"(406mm)D 2H lateral files require a separately specified counterweight when used as a freestanding unit. 24"(610mm)D units do not require a counterweight.
- Not for use with:
  –Storage Cushion Top
  –Be_Hold Storage legs
- May be used with same width Stack-On Storage For Use With 2H Lower Storage. Requires separately specified 1.18"(30mm) thick storage top.
- File drawer accommodates front-to-back and side-to-side letter filing and front-to-back legal filing with included hanging bars.
- Refer to Specification Guide for product application information.

To Order, Specify:

1) Product number, including:
❶ **Pull Option:** (see side bar)
❷ **Lock Option:**
  N No Lock
  Y Lock (add **$43.46** list)
2) TFL color for case.
3) TFL color for front.
4) Trim color for pull (Blade and Wing).
5) Trim color for lock plug (if applicable).

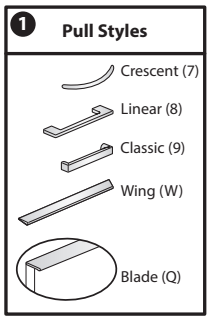

Height	Depth	Width	Pull	Number ❶❷	Case TFL A Front TFL A	Case TFL A Front TFL B	Case TFL B Front TFL A	Case TFL B Front TFL B
File/File								
28"(711mm)	16"(406mm)	24"(610mm)	7,8,9	B2LAJ-1624-TTBP ▢ ▢ R	$1260.25	$1264.97	$1293.46	$ 1298.18
			W	B2LAJ-1624-TTBPW ▢ R	1291.03	1295.75	1324.24	1328.96
			Q	B2LAJ-1624-TTBPQ ▢ R	1301.53	1306.25	1334.74	1339.46
		30"(762mm)	7,8,9	B2LAJ-1630-TTBP ▢ ▢ R	1398.37	1404.27	1433.32	1439.22
			W	B2LAJ-1630-TTBPW ▢ R	1429.15	1435.05	1464.10	1470.00
			Q	B2LAJ-1630-TTBPQ ▢ R	1439.65	1445.55	1474.60	1480.50
		36"(914mm)	7,8,9	B2LAJ-1636-TTBP ▢ ▢ R	1446.50	1453.58	1475.60	1482.68
			W	B2LAJ-1636-TTBPW ▢ R	1477.28	1484.36	1506.38	1513.46
			Q	B2LAJ-1636-TTBPQ ▢ R	1487.78	1494.86	1516.88	1523.96
		42"(1067mm)	7,8,9	B2LAJ-1642-TTBP ▢ ▢ R	1632.27	1640.53	1662.15	1670.41
			W	B2LAJ-1642-TTBPW ▢ R	1663.05	1671.31	1692.93	1701.19
			Q	B2LAJ-1642-TTBPQ ▢ R	1673.55	1681.81	1703.43	1711.69

Modular Lower Storage

2H Lateral File - Attached

Height	Depth	Width	Pull	Number ❶❷	Case TFL A Front TFL A	Case TFL A Front TFL B	Case TFL B Front TFL A	Case TFL B Front TFL B
File/File								
28"(711mm)	24"(610mm)	24"(610mm)	7,8,9	B2LAJ-2424-TTBP R	$ 1397.93	$1402.65	$1440.00	$ 1444.72
			W	B2LAJ-2424-TTBPW R	1428.71	1433.43	1470.78	1475.50
			Q	B2LAJ-2424-TTBPQ R	1439.21	1443.93	1481.28	1486.00
		30"(762mm)	7,8,9	B2LAJ-2430-TTBP R	1536.05	1541.95	1579.86	1585.76
			W	B2LAJ-2430-TTBPW R	1566.83	1572.73	1610.64	1616.54
			Q	B2LAJ-2430-TTBPQ R	1577.33	1583.23	1621.14	1627.04
		36"(914mm)	7,8,9	B2LAJ-2436-TTBP R	1584.18	1591.26	1622.14	1629.22
			W	B2LAJ-2436-TTBPW R	1614.96	1622.04	1652.92	1660.00
			Q	B2LAJ-2436-TTBPQ R	1625.46	1632.54	1663.42	1670.50
		42"(1067mm)	7,8,9	B2LAJ-2442-TTBP R	1769.95	1778.21	1808.69	1816.95
			W	B2LAJ-2442-TTBPW R	1800.73	1808.99	1839.47	1847.73
			Q	B2LAJ-2442-TTBPQ R	1811.23	1819.49	1849.97	1858.23

Modular Lower Storage

2H Lateral File - Attached

Open/Box/File

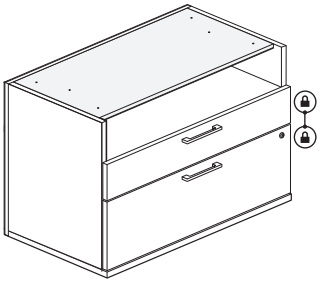

B2LAC-1642
Class BH – Open Market

Features

- Includes thermally fused laminate (TFL) lateral file with unfinished inset top, and leveling glides with 1"(25mm) adjustment range.
- File drawer standard with hanging side bars.
- Drawers have thermally fused laminate (TFL) drawer fronts.
- Drawers have full extension steel ball-bearing slides. Drawer depth is 12"(305mm).
- Drawer pull options include Crescent, Linear, Classic, Blade and Wing.
  –Crescent, Linear and Classic pulls are brushed nickel finish.
  –Blade and Wing pulls available as specifiable trim color.
- Unfinished top is predrilled to accept Modular Storage Top or Common Top.
- Bottom panel of open section is TFL and will match case.
- Available locking or non-locking; single lock secures both drawers.
- Lock plug available in black or chrome.
- Not for use with digital locks.
- For lock options, refer to Lock Program section of the Accessories Price List.

Specification Tips

- 2H Attached Modular Lower Storage units are for use in the following applications:
  –As a single storage unit; requires a separately specified 1.18"(30mm) thick Modular Storage Top.
  –To design a modular credenza; requires a separately specified 1.18"(30mm) thick Common Top.
  –Used in conjunction with a preconfigured 2H credenza; requires a separately specified 1.18"(30mm) thick Common Top.
  –In a Compose, Compose Connections and Compose Beam panel/frame mounted worksurface application.
- 16"(406mm)D 2H lateral files require a separately specified counterweight when used as a freestanding unit. 24"(610mm)D units do not require a counterweight.
- Not for use with:
  –Storage Cushion Top
  –Be_Hold Storage legs
  –Personal Drawer
- May be used with same width Stack-On Storage For Use With 2H Lower Storage. Requires separately specified storage top.
- Box drawer for use with separately specified accessories.
  –Drawer Tray
  –Drawer Liner
  –Drawer Dividers
  –Organizational Rings
  –Personal Tray
  –Pencil Tray
- File drawer accommodates front-to-back and side-to-side letter filing and front-to-back legal filing with included hanging bars.
- Refer to Specification Guide for product application information.

To Order, Specify:

1) Product number, including:
❶ **Pull Option:** (see side bar)
❷ **Lock Option:**
  N No Lock
  Y Lock (add **$43.46** list)
2) TFL color for case.
3) TFL color for front.
4) Trim color for pull (Blade and Wing).
5) Trim color for lock plug (if applicable).

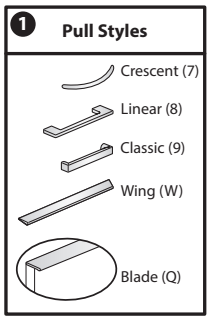

Height	Depth	Width	Pull	Number ❶❷	Case TFL A Front TFL A	Case TFL A Front TFL B	Case TFL B Front TFL A	Case TFL B Front TFL B
Open/Box/File								
28"(711mm)	16"(406mm)	24"(610mm)	7,8,9	B2LAC-1624-TTBP ▢ ▢ R	$ 1232.87	$ 1237.07	$ 1278.40	$1282.60
			W	B2LAC-1624-TTBPW ▢ R	1263.65	1267.85	1309.18	1313.38
			Q	B2LAC-1624-TTBPQ ▢ R	1274.15	1278.35	1319.68	1323.88
		30"(762mm)	7,8,9	B2LAC-1630-TTBP ▢ ▢ R	1374.47	1379.72	1424.82	1430.07
			W	B2LAC-1630-TTBPW ▢ R	1405.25	1410.50	1455.60	1460.85
			Q	B2LAC-1630-TTBPQ ▢ R	1415.75	1421.00	1466.10	1471.35
		36"(914mm)	7,8,9	B2LAC-1636-TTBP ▢ ▢ R	1426.08	1432.38	1473.66	1479.96
			W	B2LAC-1636-TTBPW ▢ R	1456.86	1463.16	1504.44	1510.74
			Q	B2LAC-1636-TTBPQ ▢ R	1467.36	1473.66	1514.94	1521.24
		42"(1067mm)	7,8,9	B2LAC-1642-TTBP ▢ ▢ R	1615.33	1622.68	1666.77	1674.12
			W	B2LAC-1642-TTBPW ▢ R	1646.11	1653.46	1697.55	1704.90
			Q	B2LAC-1642-TTBPQ ▢ R	1656.61	1663.96	1708.05	1715.40

Modular Lower Storage

2H Lateral File - Attached

Height	Depth	Width	Pull	Number ❶❷	Case TFL A Front TFL A	Case TFL A Front TFL B	Case TFL B Front TFL A	Case TFL B Front TFL B
Open/Box/File								
28"(711mm)	24"(610mm)	24"(610mm)	7,8,9	B2LAC-2424-TTBP R	$ 1370.55	$ 1374.75	$1424.94	$ 1429.14
			W	B2LAC-2424-TTBPW R	1401.33	1405.53	1455.72	1459.92
			Q	B2LAC-2424-TTBPQ R	1411.83	1416.03	1466.22	1470.42
		30"(762mm)	7,8,9	B2LAC-2430-TTBP R	1512.15	1517.40	1571.36	1576.61
			W	B2LAC-2430-TTBPW R	1542.93	1548.18	1602.14	1607.39
			Q	B2LAC-2430-TTBPQ R	1553.43	1558.68	1612.64	1617.89
		36"(914mm)	7,8,9	B2LAC-2436-TTBP R	1563.76	1570.06	1620.20	1626.50
			W	B2LAC-2436-TTBPW R	1594.54	1600.84	1650.98	1657.28
			Q	B2LAC-2436-TTBPQ R	1605.04	1611.34	1661.48	1667.78
		42"(1067mm)	7,8,9	B2LAC-2442-TTBP R	1753.01	1760.36	1813.31	1820.66
			W	B2LAC-2442-TTBPW R	1783.79	1791.14	1844.09	1851.44
			Q	B2LAC-2442-TTBPQ R	1794.29	1801.64	1854.59	1861.94

Modular Lower Storage

3H Lateral File

File/File/File

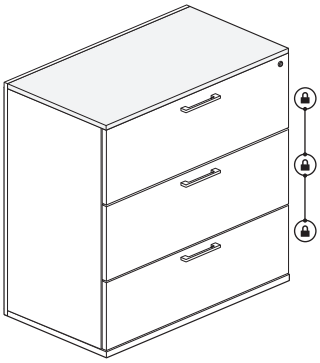

B2LAK-1642
Class BH – Open Market

Features

- Includes thermally fused laminate (TFL) lateral file with finished 0.75"(19mm) thick top, and leveling glides with 1"(25mm) adjustment range.
- File drawer standard with side hanging bars.
- Drawers have thermally fused laminate (TFL) drawer fronts.
- Drawers have full extension steel ball-bearing slides. Drawer depth is 12"(305mm).
- Drawer pull options include Crescent, Linear, Classic, Blade and Wing.
  –Crescent, Linear and Classic pulls are brushed nickel finish.
  –Blade and Wing pulls available as specifiable trim color.
- Available locking or non-locking; single lock secures all drawers.
- Lock plug available in black or chrome.
- Not for use with digital locks.
- For lock options, refer to Lock Program section of the Accessories Price List.

Specification Tips

- 3H Modular Lower Storage units are for use in the following application:
  –As a single storage unit.
  –To design a standing height credenza.
- A 16"(406mm)D freestanding lateral file requires a separately specified counterweight. 24"(610mm)D unit does not require a counterweight.
- 3H modular storage unit aligns with other Be_Hold Be 3H units however, will not horizontally align with 41"(1041mm)H Freestanding Storage.
- Not for use with:
  –Be_Hold Storage legs
  –Stack-On Storage
- File drawer accommodates front-to-back and side-to-side letter filing and front-to-back legal filing using included hanging bars.
- Refer to Specification Guide for product application information.

To Order, Specify:

1) Product number, including:

❶ **Pull Option:** (see side bar)

❷ **Lock Option:**

- **N** No Lock
- **Y** Lock (add **$43.46** list)

2) TFL color for case.
3) TFL color for front.
4) Trim color for pull (Blade and Wing).
5) Trim color for lock plug (if applicable).

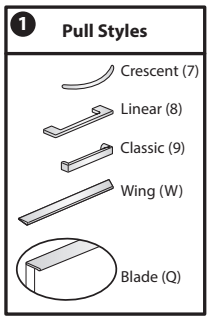

Height	Depth	Width	Pull	Number ❶❷	Case TFL A Front TFL A	Case TFL A Front TFL B	Case TFL B Front TFL A	Case TFL B Front TFL B
File/File/File								
42"(1067mm)	16"(406mm)	30"(762mm)	7,8,9	B2LAK-1630-TTBP ☐ ☐ R	$ 1771.51	$ 1780.21	$ 1803.78	$ 1812.48
			W	B2LAK-1630-TTBPW ☐ R	1817.68	1826.38	1849.95	1858.65
			Q	B2LAK-1630-TTBPQ ☐ R	1833.43	1842.13	1865.70	1874.40
		36"(914mm)	7,8,9	B2LAK-1636-TTBP ☐ ☐ R	1832.03	1842.47	1858.45	1868.89
			W	B2LAK-1636-TTBPW ☐ R	1878.20	1888.64	1904.62	1915.06
			Q	B2LAK-1636-TTBPQ ☐ R	1893.95	1904.39	1920.37	1930.81
		42"(1067mm)	7,8,9	B2LAK-1642-TTBP ☐ ☐ R	2030.19	2042.37	2057.39	2069.57
			W	B2LAK-1642-TTBPW ☐ R	2076.36	2088.54	2103.56	2115.74
			Q	B2LAK-1642-TTBPQ ☐ R	2092.11	2104.29	2119.31	2131.49
	24"(610mm)	30"(762mm)	7,8,9	B2LAK-2430-TTBP ☐ ☐ R	$ 1909.19	$ 1917.89	$ 1950.32	$ 1959.02
			W	B2LAK-2430-TTBPW ☐ R	1955.36	1964.06	1996.49	2005.19
			Q	B2LAK-2430-TTBPQ ☐ R	1971.11	1979.81	2012.24	2020.94
		36"(914mm)	7,8,9	B2LAK-2436-TTBP ☐ ☐ R	1969.71	1980.15	2004.99	2015.43
			W	B2LAK-2436-TTBPW ☐ R	2015.88	2026.32	2051.16	2061.60
			Q	B2LAK-2436-TTBPQ ☐ R	2031.63	2042.07	2066.91	2077.35
		42"(1067mm)	7,8,9	B2LAK-2442-TTBP ☐ ☐ R	2167.87	2180.05	2203.93	2216.11
			W	B2LAK-2442-TTBPW ☐ R	2214.04	2226.22	2250.10	2262.28
			Q	B2LAK-2442-TTBPQ ☐ R	2229.79	2241.97	2265.85	2278.03

Modular Lower Storage

Credenza with Sliding Doors

Catalog Logic

B2 C R L - 16 42 - T T N P G N S N Y R

Product Line
(B2) Be_Hold Be

Product Type
(C) Credenza

Height/Configuration
(R) 1.5H
(S) 2H

Handedness
(L) Left Hand
(R) Right Hand

Depth
16”
24”

Width
36”
42”
48”
54”
60”
66”
72”

Case Finish Type
(T) Thermally Fused Laminate - TFL

Front Finish Type
(T) Thermally Fused Laminate - TFL

Drawer Construction
(N) No Drawer

Back
(P) Proud

Base
(G) Glides

Height Adjustable Table Bezel
(N) No Bezel

Pull
(S) Sliding Door Pull

Power Cutout (HAT only)
(N) No Power Cutout

Lock Option
(Y) Locking
(N) No Lock

Close Type
(R) Regular

Modular Lower Storage

Credenza with Drawers

Catalog Logic

B2 C A B - 16 42 - T T B P G N 7 N Y R

Product Line
(B2) Be_Hold Be

Product Type
(C) Credenza

Height/Configuration
1.5H
(A) Box/File/Open
(B) Open/Box/File
2H
(C) Box/Box/File/Open
(D) Open/Box/Box/File
(E) File/File/Open
(F) Open/File/File

Functional Side
(B) 24"W
(C) 30"W
(D) 36"W

Depth
16"
24"

Width
42"
48"
54"
60"
66"
72"

Case Finish Type
(T) Thermally Fused Laminate - TFL

Front Finish Type
(T) Thermally Fused Laminate - TFL

Drawer Construction
(B) Black Composite Wood

Back
(P) Proud

Base
(G) Glides

Height Adjustable Table Bezel
(N) No Bezel

Pull
(7) Crescent
(8) Linear
(9) Classic
(Q) Blade
(W) Wing

Power Cutout (HAT only)
(N) No Power Cutout

Lock Option
(Y) Locking
(N) No Lock

Close Type
(R) Regular Close

Modular Lower Storage

Credenza with Drawers - Mobile

Catalog Logic

B2 C A B - 16 48 - T T B P C N 7 N Y R

Product Line
(B2) Be_Hold Be

Product Type
(C) Credenza

Height/Configuration
1.5H
(A) Box/File/Open
(B) Open/Box/File

Functional Side
(B) 24"W

Depth
16"

Width
48"

Case Finish Type
(T) Thermally Fused Laminate - TFL

Front Finish Type
(T) Thermally Fused Laminate - TFL

Drawer Construction
(B) Black Composite Wood

Back
(P) Proud

Base
(C) Casters

Height Adjustable Table Bezel
(N) No Bezel

Pull
(7) Crescent
(8) Linear
(9) Classic
(Q) Blade
(W) Wing

Power Cutout
(N) No Power Cutout

Lock Option
(Y) Locking
(N) No Lock

Close Type
(R) Regular Close

Modular Lower Storage

Credenza with Drawers for HAT

Catalog Logic

B2 C Y C - 16 60 - T T B P G Y 7 N Y R

Product Line
(B2) Be_Hold Be

Product Type
(C) Credenza

Height/Configuration
1.5H
(Y) Box/File/Open HAT
(Z) Open HAT/Box/File

Functional Side
(C) 30”W
(D) 36”W
(E) 42”W

Depth
16”
24”

Width
60”
66”
72”
78”

Case Finish Type
(T) Thermally Fused Laminate - TFL

Front Finish Type
(T) Thermally Fused Laminate - TFL

Drawer Construction
(B) Black Composite Wood

Back
(P) Proud

Base
(G) Glides

Height Adjustable Table Bezel
(Y) Bezel

Pull
(7) Crescent
(8) Linear
(9) Classic
(Q) Blade
(W) Wing

Power Cutout for HAT
(N) No Power Cutout
(Y) Power Cutout

Lock Option
(Y) Locking
(N) No Lock

Close Type
(R) Regular Close

Modular Lower Storage

1.5H Credenza - Preconfigured

Sliding Doors

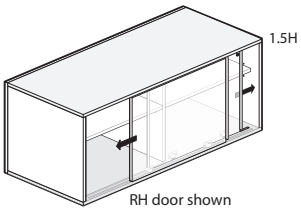

B2CRR-TTNP
Class BH – Open Market

Features

- Includes thermally fused laminate (TFL) case with sliding doors, two compartments each with one adjustable TFL shelf, full height divider, finished 0.75"(19mm) thick top, and glides.
- TFL shelves match case.
- Height adjustable shelves insert into designated mounting locations. See Product Details.
- Glides provide 1"(25mm) leveling adjustment.
- Door handedness is determined by the inset door.
- Sliding door pull available in Metallic Silver TR-LE only.
- Available locking or non-locking. Lock will be located in inset door.
- Lock plug available in chrome only.
- Not for use with digital locks.
- For lock options, refer to Lock Program section of the Accessories Price List.

Specification Tips

- 1.5H Storage Credenza is for use in the following applications:
  –As a single credenza.
  –Used adjacent to another credenza.
  –Used in conjunction with modular lower storage unit(s).
- For use with the following separately specified items:
  –Filing and Storage Cushion Top **or** same width Stack-on Storage for Use with 1.5H Lower Storage.
  –Personal Drawer
- Not for use with:
  –TFL Accessory Shelf
  –Be_Hold Storage legs
  –Worksurface to Storage Bracket
- Refer to Specification Guide for product application information.

To Order, Specify:

1) Product number, including:

❶ **Door Handedness:**
- **L** Left Hand
- **R** Right Hand

❷ **Lock Option:**
- **N** No Lock
- **Y** Lock (add **$43.46** list)

2) TFL case color.
3) TFL front color.
4) Trim color for sliding door pull. (TR-LE Metallic Silver only)
5) Trim color for lock plug (LR-BP chrome only).

Height	Depth	Width	Number ❶	❷	Case TFL A Front TFL A	Case TFL A Front TFL B	Case TFL B Front TFL A	Case TFL B Front TFL B
22"(559mm)	16"(406mm)	36"(914mm)	B2CR	-1636-TTNPGNSN	R	$ 1387.56	$ 1393.62	$ 1410.84	$ 1416.90
		42"(1067mm)	B2CR	-1642-TTNPGNSN	R	1448.13	1455.20	1472.36	1479.43
		48"(1219mm)	B2CR	-1648-TTNPGNSN	R	1508.70	1516.78	1533.88	1541.96
		54"(1372mm)	B2CR	-1654-TTNPGNSN	R	1569.27	1578.36	1595.40	1604.49
		60"(1524mm)	B2CR	-1660-TTNPGNSN	R	1629.84	1639.94	1656.92	1667.02
		66"(1676mm)	B2CR	-1666-TTNPGNSN	R	1690.41	1701.52	1718.44	1729.55
		72"(1829mm)	B2CR	-1672-TTNPGNSN	R	1750.98	1763.10	1779.96	1792.08
	24"(610mm)	36"(914mm)	B2CR	-2436-TTNPGNSN	R	$ 1519.22	$ 1525.28	$ 1546.56	$ 1552.62
		42"(1067mm)	B2CR	-2442-TTNPGNSN	R	1579.79	1586.86	1608.08	1615.15
		48"(1219mm)	B2CR	-2448-TTNPGNSN	R	1640.36	1648.44	1669.60	1677.68
		54"(1372mm)	B2CR	-2454-TTNPGNSN	R	1700.93	1710.02	1731.12	1740.21
		60"(1524mm)	B2CR	-2460-TTNPGNSN	R	1761.50	1771.60	1792.64	1802.74
		66"(1676mm)	B2CR	-2466-TTNPGNSN	R	1822.07	1833.18	1854.16	1865.27
		72"(1829mm)	B2CR	-2472-TTNPGNSN	R	1882.64	1894.76	1915.68	1927.80

Modular Lower Storage

1.5H Credenza - Preconfigured

Drawers

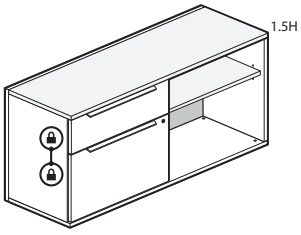

B2CAB-TTBP

Class BH – Open Market

Features

- Includes thermally fused laminate (TFL) case with lateral file, one adjustable TFL shelf, finished 0.75"(19mm) thick top, and glides.
- TFL shelf matches case.
- Drawers have full extension steel ball-bearing slides. Drawer depth is 12"(305mm).
- Drawer pull options include Crescent, Linear, Classic, Blade, and Wing.
  –Crescent, Linear and Classic pulls are brushed nickel finish.
  –Blade and Wing pulls are specifiable trim color.
- Available locking or non-locking. Single lock secures all drawers.
- Lock plug available in black or chrome.
- Not for use with digital locks.
- For lock options, refer to Lock Program section of the Accessories Price List.
- Glides provide 1"(25mm) leveling adjustment.

Specification Tips

- 1.5H Storage Credenza is for use in the following applications:
  –As a single credenza.
  –Used adjacent to another credenza.
  –Used in conjunction with modular lower storage unit(s).
  –Used to support one end of a fixed height Convergent Worksurface; requires separately specified Desk-to-Storage Bracket and floor support for opposite end.
- For use with the following separately specified items:
  –Filing and Storage Cushion Top **or** Stack-on Storage for Use with 1.5H Lower Storage.
  Note: Cushion Top or Stack-On Storage must be same width as a single unit or a single unit within a Configured Credenza.
  –Personal Drawer
- Not for use with:
  –TFL Accessory Shelf
  –Be_Hold Storage legs
- Box drawer for use with separately specified accessories:
  –Drawer Tray
  –Drawer Liner
  –Drawer Dividers
  –Organizational Rings
  –Personal Tray
  –Pencil Tray
- File drawer accommodates front-to-back and side-to-side letter filing and front-to-back legal filing with included hanging bars.
- Refer to Specification Guide for product application information.

To Order, Specify:

1) Product number, including:

❶ **Pull Option:** (see side bar)

❷ **Lock Option:**

N No Lock

Y Lock (add **$43.46** list)

2) TFL case color.
3) TFL front color.
4) Trim color for pull (Blade and Wing).
5) Trim color for lock plug (if applicable).

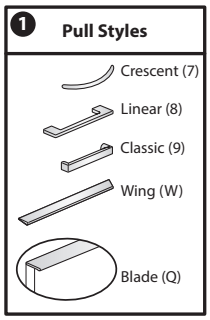

Modular Lower Storage

1.5H Credenza - Preconfigured

Height	Depth	Width	Pull	Number ❶ ❷	Case TFL A Front TFL A	Case TFL A Front TFL B	Case TFL B Front TFL A	Case TFL B Front TFL B
42”(1067mm)W								
24”(610mm)W Box/File Left/18”(457mm)W Open Right								
22”(559mm)	16”(406mm)	42”(1067mm)	7,8,9	B2CAB-1642-TTBPGN N R	$ 1413.88	$ 1417.92	$ 1438.12	$ 1442.16
			W	B2CAB-1642-TTBPGNWN R	1442.84	1446.88	1467.08	1471.12
			Q	B2CAB-1642-TTBPGNQN R	1453.38	1457.42	1477.62	1481.66
	24”(610mm)		7,8,9	B2CAB-2442-TTBPGN N R	$1545.54	$1549.58	$ 1573.84	$ 1577.88
			W	B2CAB-2442-TTBPGNWN R	1574.50	1578.54	1602.80	1606.84
			Q	B2CAB-2442-TTBPGNQN R	1585.04	1589.08	1613.34	1617.38
18”(457mm)W Open Left/24”(610mm)W Box/File Right								
22”(559mm)	16”(406mm)	42”(1067mm)	7,8,9	B2CBB-1642-TTBPGN N R	$ 1413.88	$ 1417.92	$ 1438.12	$ 1442.16
			W	B2CBB-1642-TTBPGNWN R	1442.84	1446.88	1467.08	1471.12
			Q	B2CBB-1642-TTBPGNQN R	1453.38	1457.42	1477.62	1481.66
	24”(610mm)		7,8,9	B2CBB-2442-TTBPGN N R	$1545.54	$1549.58	$ 1573.84	$ 1577.88
			W	B2CBB-2442-TTBPGNWN R	1574.50	1578.54	1602.80	1606.84
			Q	B2CBB-2442-TTBPGNQN R	1585.04	1589.08	1613.34	1617.38
48”(1219mm)W								
24”(610mm)W Box/File Left/24”(610mm)W Open Right								
22”(559mm)	16”(406mm)	48”(1219mm)	7,8,9	B2CAB-1648-TTBPGN N R	$1453.38	$ 1457.42	$ 1478.57	$ 1482.61
			W	B2CAB-1648-TTBPGNWN R	1482.34	1486.38	1507.53	1511.57
			Q	B2CAB-1648-TTBPGNQN R	1492.88	1496.92	1518.07	1522.11
	24”(610mm)		7,8,9	B2CAB-2448-TTBPGN N R	$1585.04	$1589.08	$ 1614.29	$ 1618.33
			W	B2CAB-2448-TTBPGNWN R	1614.00	1618.04	1643.25	1647.29
			Q	B2CAB-2448-TTBPGNQN R	1624.54	1628.58	1653.79	1657.83
24”(610mm)W Open Left/24”(610mm)W Box/File Right								
22”(559mm)	16”(406mm)	48”(1219mm)	7,8,9	B2CBB-1648-TTBPGN N R	$1453.38	$ 1457.42	$ 1478.57	$ 1482.61
			W	B2CBB-1648-TTBPGNWN R	1482.34	1486.38	1507.53	1511.57
			Q	B2CBB-1648-TTBPGNQN R	1492.88	1496.92	1518.07	1522.11
	24”(610mm)		7,8,9	B2CBB-2448-TTBPGN N R	$1585.04	$1589.08	$ 1614.29	$ 1618.33
			W	B2CBB-2448-TTBPGNWN R	1614.00	1618.04	1643.25	1647.29
			Q	B2CBB-2448-TTBPGNQN R	1624.54	1628.58	1653.79	1657.83
54”(1372mm)W								
30”(762mm)W Box/File Left/24”(610mm)W Open Right								
22”(559mm)	16”(406mm)	54”(1372mm)	7,8,9	B2CAC-1654-TTBPGN N R	$1553.45	$1558.50	$ 1579.59	$1584.64
			W	B2CAC-1654-TTBPGNWN R	1582.41	1587.46	1608.55	1613.60
			Q	B2CAC-1654-TTBPGNQN R	1592.95	1598.00	1619.09	1624.14
	24”(610mm)		7,8,9	B2CAC-2454-TTBPGN N R	$ 1685.11	$ 1690.16	$ 1715.31	$1720.36
			W	B2CAC-2454-TTBPGNWN R	1714.07	1719.12	1744.27	1749.32
			Q	B2CAC-2454-TTBPGNQN R	1724.61	1729.66	1754.81	1759.86
24”(610mm)W Open Left/30”(762mm)W Box/File Right								
22”(559mm)	16”(406mm)	54”(1372mm)	7,8,9	B2CBC-1654-TTBPGN N R	$1553.45	$1558.50	$ 1579.59	$1584.64
			W	B2CBC-1654-TTBPGNWN R	1582.41	1587.46	1608.55	1613.60
			Q	B2CBC-1654-TTBPGNQN R	1592.95	1598.00	1619.09	1624.14
	24”(610mm)		7,8,9	B2CBC-2454-TTBPGN N R	$ 1685.11	$ 1690.16	$ 1715.31	$1720.36
			W	B2CBC-2454-TTBPGNWN R	1714.07	1719.12	1744.27	1749.32
			Q	B2CBC-2454-TTBPGNQN R	1724.61	1729.66	1754.81	1759.86

Modular Lower Storage

1.5H Credenza - Preconfigured

Height	Depth	Width	Pull	Number ❶ ❷	Case TFL A Front TFL A	Case TFL A Front TFL B	Case TFL B Front TFL A	Case TFL B Front TFL B
60”(1524mm)W								
30”(762mm)W Box/File Left/30”(762mm)W Open Right								
22”(559mm)	16”(406mm)	60”(1524mm)	7,8,9	B2CAC-1660-TTBPGN N R	$1592.95	$1598.00	$1620.04	$1625.09
			W	B2CAC-1660-TTBPGNWN R	1621.91	1626.96	1649.00	1654.05
			Q	B2CAC-1660-TTBPGNQN R	1632.45	1637.50	1659.54	1664.59
	24”(610mm)		7,8,9	B2CAC-2460-TTBPGN N R	$ 1724.61	$ 1729.66	$ 1755.76	$ 1760.81
			W	B2CAC-2460-TTBPGNWN R	1753.57	1758.62	1784.72	1789.77
			Q	B2CAC-2460-TTBPGNQN R	1764.11	1769.16	1795.26	1800.31
30”(762mm)W Open Left/30”(762mm)W Box/File Right								
22”(559mm)	16”(406mm)	60”(1524mm)	7,8,9	B2CBC-1660-TTBPGN N R	$1592.95	$1598.00	$1620.04	$1625.09
			W	B2CBC-1660-TTBPGNWN R	1621.91	1626.96	1649.00	1654.05
			Q	B2CBC-1660-TTBPGNQN R	1632.45	1637.50	1659.54	1664.59
	24”(610mm)		7,8,9	B2CBC-2460-TTBPGN N R	$ 1724.61	$ 1729.66	$ 1755.76	$ 1760.81
			W	B2CBC-2460-TTBPGNWN R	1753.57	1758.62	1784.72	1789.77
			Q	B2CBC-2460-TTBPGNQN R	1764.11	1769.16	1795.26	1800.31
66”(1676mm)W								
36”(914mm)W Box/File Left/30”(762mm)W Open Right								
22”(559mm)	16”(406mm)	66”(1676mm)	7,8,9	B2CAD-1666-TTBPGN N R	$ 1725.92	$ 1731.98	$ 1753.96	$1760.02
			W	B2CAD-1666-TTBPGNWN R	1754.88	1760.94	1782.92	1788.98
			Q	B2CAD-1666-TTBPGNQN R	1765.42	1771.48	1793.46	1799.52
	24”(610mm)		7,8,9	B2CAD-2466-TTBPGN N R	$ 1857.58	$ 1863.64	$ 1889.68	$ 1895.74
			W	B2CAD-2466-TTBPGNWN R	1886.54	1892.60	1918.64	1924.70
			Q	B2CAD-2466-TTBPGNQN R	1897.08	1903.14	1929.18	1935.24
30”(762mm)W Open Left/36”(914mm)W Box/File Right								
22”(559mm)	16”(406mm)	66”(1676mm)	7,8,9	B2CBD-1666-TTBPGN N R	$ 1725.92	$ 1731.98	$ 1753.96	$1760.02
			W	B2CBD-1666-TTBPGNWN R	1754.88	1760.94	1782.92	1788.98
			Q	B2CBD-1666-TTBPGNQN R	1765.42	1771.48	1793.46	1799.52
	24”(610mm)		7,8,9	B2CBD-2466-TTBPGN N R	$ 1857.58	$ 1863.64	$ 1889.68	$ 1895.74
			W	B2CBD-2466-TTBPGNWN R	1886.54	1892.60	1918.64	1924.70
			Q	B2CBD-2466-TTBPGNQN R	1897.08	1903.14	1929.18	1935.24
72”(1829mm)W								
36”(914mm)W Box/File Left/36”(914mm)W Open Right								
22”(559mm)	16”(406mm)	72”(1829mm)	7,8,9	B2CAD-1672-TTBPGN N R	$ 1765.42	$ 1771.48	$ 1794.41	$1800.47
			W	B2CAD-1672-TTBPGNWN R	1794.38	1800.44	1823.37	1829.43
			Q	B2CAD-1672-TTBPGNQN R	1804.92	1810.98	1833.91	1839.97
	24”(610mm)		7,8,9	B2CAD-2472-TTBPGN N R	$ 1897.08	$ 1903.14	$ 1930.13	$ 1936.19
			W	B2CAD-2472-TTBPGNWN R	1926.04	1932.10	1959.09	1965.15
			Q	B2CAD-2472-TTBPGNQN R	1936.58	1942.64	1969.63	1975.69
36”(914mm)W Open Left/36”(914mm)W Box/File Right								
22”(559mm)	16”(406mm)	72”(1829mm)	7,8,9	B2CBD-1672-TTBPGN N R	$ 1765.42	$ 1771.48	$ 1794.41	$1800.47
			W	B2CBD-1672-TTBPGNWN R	1794.38	1800.44	1823.37	1829.43
			Q	B2CBD-1672-TTBPGNQN R	1804.92	1810.98	1833.91	1839.97
	24”(610mm)		7,8,9	B2CBD-2472-TTBPGN N R	$ 1897.08	$ 1903.14	$ 1930.13	$ 1936.19
			W	B2CBD-2472-TTBPGNWN R	1926.04	1932.10	1959.09	1965.15
			Q	B2CBD-2472-TTBPGNQN R	1936.58	1942.64	1969.63	1975.69

Modular Lower Storage

2H Credenza - Preconfigured - Attached

Sliding Doors

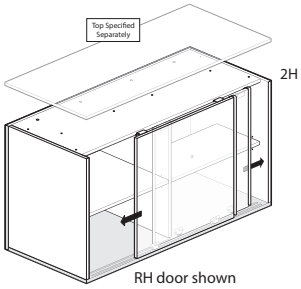

B2CSR-TTNP
Class BH – Open Market

Features

- Includes thermally fused laminate (TFL) case with sliding doors, two compartments each with one adjustable TFL shelf, full height divider, unfinished top, and glides.
- TFL shelves match case.
- Height adjustable shelves insert into designated mounting locations. See Product Details.
- Glides provide 1"(25mm) leveling adjustment.
- Unfinished top is predrilled to accept separately specified Modular Storage Top or Common Top.
- Door handedness is determined by the inset door.
- Sliding door pull available in Metallic Silver TR-LE only.
- Available locking or non-locking. Lock will be located in inset door.
- Lock plug available in chrome only.
- Not for use with digital locks.
- For lock options, refer to Lock Program section of the Accessories Price List.

Specification Tips

- 2H Attached Storage Credenza is for use in the following applications:
  - –As a single credenza; requires a separately specified 1.18"(30mm) thick Modular Storage Top.
  - –Used adjacent to another attached credenza; requires a separately specified 1.18"(30mm) thick Common Top.
  - –Used in conjunction with attached modular lower storage unit(s); requires a separately specified 1.18"(30mm) thick Common Top.
  - –Used to support one end of a fixed height Convergent Worksurface; requires two separately specified Convergent Worksurface Brackets (ZBBC-0000-SN) and floor support for opposite end.
- For use with the following separately specified items:
  - –Same width Stack-on Storage for Use with 2H Lower Storage; requires separately specified 1.18"(30mm) thick storage top.
  - –Personal Drawer
- Not for use with:
  - –Storage Cushion Top
  - –TFL Accessory Shelf
  - –Be_Hold Storage legs
- Refer to Specification Guide for product application information.

To Order, Specify:

1) Product number, including:

❶ **Door Handedness:**
- **L** Left Hand
- **R** Right Hand

❷ **Lock Option:**
- **N** No Lock
- **Y** Lock (add **$43.46** list)

2) TFL case color.
3) TFL front color.
4) Trim color for sliding door pull (TR-LE Metallic Silver only).
5) Trim color for lock plug (LR-BP chrome only).

Height	Depth	Width	Number ❶	Number ❷	Case TFL A Front TFL A	Case TFL A Front TFL B	Case TFL B Front TFL A	Case TFL B Front TFL B
28"(711mm)	16"(406mm)	36"(914mm)	B2CS	-1636-TTNPGNSN R	$ 1685.03	$ 1692.65	$ 1714.35	$ 1721.97
		42"(1067mm)	B2CS	-1642-TTNPGNSN R	1750.87	1759.76	1781.14	1790.03
		48"(1219mm)	B2CS	-1648-TTNPGNSN R	1816.71	1826.87	1847.93	1858.09
		54"(1372mm)	B2CS	-1654-TTNPGNSN R	1882.55	1893.98	1914.72	1926.15
		60"(1524mm)	B2CS	-1660-TTNPGNSN R	1948.39	1961.09	1981.51	1994.21
		66"(1676mm)	B2CS	-1666-TTNPGNSN R	2014.23	2028.20	2048.30	2062.27
		72"(1829mm)	B2CS	-1672-TTNPGNSN R	2080.07	2095.31	2115.09	2130.33
	24"(610mm)	36"(914mm)	B2CS	-2436-TTNPGNSN R	$ 1816.69	$ 1824.31	$ 1850.07	$ 1857.69
		42"(1067mm)	B2CS	-2442-TTNPGNSN R	1882.53	1891.42	1916.86	1925.75
		48"(1219mm)	B2CS	-2448-TTNPGNSN R	1948.37	1958.53	1983.65	1993.81
		54"(1372mm)	B2CS	-2454-TTNPGNSN R	2014.21	2025.64	2050.44	2061.87
		60"(1524mm)	B2CS	-2460-TTNPGNSN R	2080.05	2092.75	2117.23	2129.93
		66"(1676mm)	B2CS	-2466-TTNPGNSN R	2145.89	2159.86	2184.02	2197.99
		72"(1829mm)	B2CS	-2472-TTNPGNSN R	2211.73	2226.97	2250.81	2266.05

Modular Lower Storage

2H Credenza - Preconfigured - Attached

Drawers

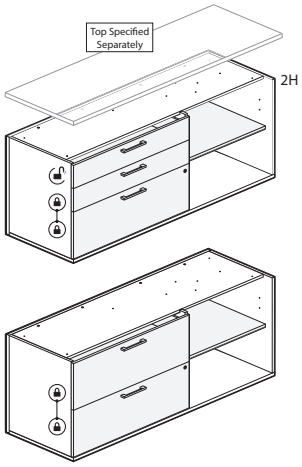

B2CCB-TTBP

Class BH – Open Market

Features

- Includes thermally fused laminate (TFL) case with lateral file, one adjustable TFL shelf, unfinished top, and glides.
- TFL shelf matches case.
- Glides provide 1"(25mm) leveling adjustment.
- Drawers have full extension steel ball-bearing slides. Drawer depth is 12"(305mm).
- Drawer pull options include Crescent, Linear, Classic, Blade, and Wing.
  –Crescent, Linear and Classic pulls are brushed nickel finish.
  –Blade and Wing pulls are specifiable trim color.
- Height adjustable shelf inserts into designated mounting locations. See Product Details.
- Available locking or non-locking:
  –Box/Box/File standard with top drawer non-locking and single lock to secure bottom drawers.
  –File/File single lock secures both drawers.
- Lock plug available in black or chrome.
- Not for use with digital locks.
- For lock options, refer to Lock Program section of the Accessories Price List.

Specification Tips

- 2H Attached Storage Credenza is for use in the following applications:
  –As a single credenza; requires a separately specified 1.18"(30mm) thick Modular Storage Top.
  –Used adjacent to another attached credenza; requires a separately specified 1.18"(30mm) thick Common Top.
  –Used in conjunction with attached modular lower storage unit(s); requires a separately specified 1.18"(30mm) thick Common Top.
  –Used to support one end of a fixed height Convergent Worksurface; requires two separately specified Convergent Worksurface Brackets (ZBBC-0000-SN) and floor support for opposite end.
- For use with the following separately specified items:
  –Same width Stack-on Storage for Use with 2H Lower Storage; requires separately specified 1.18"(30mm) thick storage top.
  Note: Stack-On Storage must be same width as a single unit or a single unit within a Configured Credenza.
  –Reduced width stanchion mounted OSU; OSU must be at least 6"(152mm) less than credenza width.
  –Personal Drawer
- Not for use with:
  –Storage Cushion Top
  –TFL Accessory Shelf
  –Be_Hold Storage legs
- Box drawer for use with separately specified accessories:
  –Drawer Tray
  –Drawer Liner
  –Drawer Dividers
  –Organizational Rings
  –Personal Tray
  –Pencil Tray
- File drawer accommodates front-to-back and side-to-side letter filing and front-to-back legal filing with included hanging bars.
- Refer to Specification Guide for product application information.

To Order, Specify:

1) Product number, including:

❶ **Pull Option:** (see side bar)

❷ **Lock Option:**

N No Lock

Y Lock (add **$43.46** list)

2) TFL case color.
3) TFL front color.
4) Trim color for pull (Blade and Wing).
5) Trim color for lock plug (if applicable).

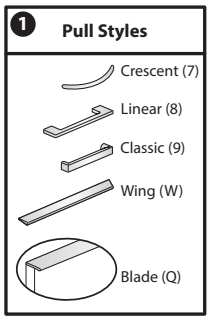

Modular Lower Storage

2H Credenza - Preconfigured - Attached

Height	Depth	Width	Pull	Number ❶ ❷	Case TFL A Front TFL A	Case TFL A Front TFL B	Case TFL B Front TFL A	Case TFL B Front TFL B
42”(1067mm)W								
24”(610mm)W Box/Box/File Left/18”(457mm)W Open Right								
28”(711mm)	16”(406mm)	42”(1067mm)	7,8,9	B2CCB-1642-TTBPGN N R	$1784.85	$ 1790.05	$ 1815.28	$ 1820.48
			W	B2CCB-1642-TTBPGNWN R	1828.29	1833.49	1858.72	1863.92
			Q	B2CCB-1642-TTBPGNQN R	1844.10	1849.30	1874.53	1879.73
	24”(610mm)		7,8,9	B2CCB-2442-TTBPGN N R	$ 1916.51	$ 1921.71	$ 1951.00	$ 1956.20
			W	B2CCB-2442-TTBPGNWN R	1959.95	1965.15	1994.44	1999.64
			Q	B2CCB-2442-TTBPGNQN R	1975.76	1980.96	2010.25	2015.45
24”(610mm)W File/File Left/18”(457mm)W Open Right								
28”(711mm)	16”(406mm)	42”(1067mm)	7,8,9	B2CEB-1642-TTBPGN N R	$1746.66	$ 1751.86	$ 1777.09	$ 1782.29
			W	B2CEB-1642-TTBPGNWN R	1775.62	1780.82	1806.05	1811.25
			Q	B2CEB-1642-TTBPGNQN R	1786.16	1791.36	1816.59	1821.79
	24”(610mm)		7,8,9	B2CEB-2442-TTBPGN N R	$ 1878.32	$ 1883.52	$ 1912.81	$ 1918.01
			W	B2CEB-2442-TTBPGNWN R	1907.28	1912.48	1941.77	1946.97
			Q	B2CEB-2442-TTBPGNQN R	1917.82	1923.02	1952.31	1957.51
18”(457mm)W Open Left/24”(610mm)W Box/Box/File Right								
28”(711mm)	16”(406mm)	42”(1067mm)	7,8,9	B2CDB-1642-TTBPGN N R	$1784.85	$ 1790.05	$ 1815.28	$ 1820.48
			W	B2CDB-1642-TTBPGNWN R	1828.29	1833.49	1858.72	1863.92
			Q	B2CDB-1642-TTBPGNQN R	1844.10	1849.30	1874.53	1879.73
	24”(610mm)		7,8,9	B2CDB-2442-TTBPGN N R	$ 1916.51	$ 1921.71	$ 1951.00	$ 1956.20
			W	B2CDB-2442-TTBPGNWN R	1959.95	1965.15	1994.44	1999.64
			Q	B2CDB-2442-TTBPGNQN R	1975.76	1980.96	2010.25	2015.45
18”(457mm)W Open Left/24”(610mm)W File/File Right								
28”(711mm)	16”(406mm)	42”(1067mm)	7,8,9	B2CFB-1642-TTBPGN N R	$1746.66	$ 1751.86	$ 1777.09	$ 1782.29
			W	B2CFB-1642-TTBPGNWN R	1775.62	1780.82	1806.05	1811.25
			Q	B2CFB-1642-TTBPGNQN R	1786.16	1791.36	1816.59	1821.79
	24”(610mm)		7,8,9	B2CFB-2442-TTBPGN N R	$ 1878.32	$ 1883.52	$ 1912.81	$ 1918.01
			W	B2CFB-2442-TTBPGNWN R	1907.28	1912.48	1941.77	1946.97
			Q	B2CFB-2442-TTBPGNQN R	1917.82	1923.02	1952.31	1957.51
48”(1219mm)W								
24”(610mm)W Box/Box/File Left/24”(610mm)W Open Right								
28”(711mm)	16”(406mm)	48”(1219mm)	7,8,9	B2CCB-1648-TTBPGN N R	$1824.35	$ 1829.55	$ 1855.73	$ 1860.93
			W	B2CCB-1648-TTBPGNWN R	1867.79	1872.99	1899.17	1904.37
			Q	B2CCB-1648-TTBPGNQN R	1883.60	1888.80	1914.98	1920.18
	24”(610mm)		7,8,9	B2CCB-2448-TTBPGN N R	$ 1956.01	$ 1961.21	$ 1991.45	$ 1996.65
			W	B2CCB-2448-TTBPGNWN R	1999.45	2004.65	2034.89	2040.09
			Q	B2CCB-2448-TTBPGNQN R	2015.26	2020.46	2050.70	2055.90
24”(610mm)W File/File Left/24”(610mm)W Open Right								
28”(711mm)	16”(406mm)	48”(1219mm)	7,8,9	B2CEB-1648-TTBPGN N R	$ 1786.16	$ 1791.36	$ 1817.54	$ 1822.74
			W	B2CEB-1648-TTBPGNWN R	1815.12	1820.32	1846.50	1851.70
			Q	B2CEB-1648-TTBPGNQN R	1825.66	1830.86	1857.04	1862.24
	24”(610mm)		7,8,9	B2CEB-2448-TTBPGN N R	$ 1917.82	$ 1923.02	$ 1953.26	$ 1958.46
			W	B2CEB-2448-TTBPGNWN R	1946.78	1951.98	1982.22	1987.42
			Q	B2CEB-2448-TTBPGNQN R	1957.32	1962.52	1992.76	1997.96

Modular Lower Storage

2H Credenza - Preconfigured - Attached

Height	Depth	Width	Pull	Number ❶ ❷	Case TFL A Front TFL A	Case TFL A Front TFL B	Case TFL B Front TFL A	Case TFL B Front TFL B
48”(1219mm)W								
24”(610mm)W Open Left/24”(610mm)W Box/Box/File Right								
28”(711mm)	16”(406mm)	48”(1219mm)	7,8,9	B2CDB-1648-TTBPGN N R	$ 1824.35	$ 1829.55	$ 1855.73	$ 1860.93
			W	B2CDB-1648-TTBPGNWN R	1867.79	1872.99	1899.17	1904.37
			Q	B2CDB-1648-TTBPGNQN R	1883.60	1888.80	1914.98	1920.18
	24”(610mm)		7,8,9	B2CDB-2448-TTBPGN N R	$ 1956.01	$ 1961.21	$ 1991.45	$ 1996.65
			W	B2CDB-2448-TTBPGNWN R	1999.45	2004.65	2034.89	2040.09
			Q	B2CDB-2448-TTBPGNQN R	2015.26	2020.46	2050.70	2055.90
24”(610mm)W Open Left/24”(610mm)W File/File Right								
28”(711mm)	16”(406mm)	48”(1219mm)	7,8,9	B2CFB-1648-TTBPGN N R	$ 1786.16	$ 1791.36	$ 1817.54	$ 1822.74
			W	B2CFB-1648-TTBPGNWN R	1815.12	1820.32	1846.50	1851.70
			Q	B2CFB-1648-TTBPGNQN R	1825.66	1830.86	1857.04	1862.24
	24”(610mm)		7,8,9	B2CFB-2448-TTBPGN N R	$ 1917.82	$ 1923.02	$ 1953.26	$ 1958.46
			W	B2CFB-2448-TTBPGNWN R	1946.78	1951.98	1982.22	1987.42
			Q	B2CFB-2448-TTBPGNQN R	1957.32	1962.52	1992.76	1997.96
54”(1372mm)W								
30”(762mm)W Box/Box/File Left/24”(610mm)W Open Right								
28”(711mm)	16”(406mm)	54”(1372mm)	7,8,9	B2CCC-1654-TTBPGN N R	$ 1927.04	$ 1933.54	$ 1959.37	$ 1965.87
			W	B2CCC-1654-TTBPGNWN R	1970.48	1976.98	2002.81	2009.31
			Q	B2CCC-1654-TTBPGNQN R	1986.29	1992.79	2018.62	2025.12
	24”(610mm)		7,8,9	B2CCC-2454-TTBPGN N R	$2058.70	$2065.20	$2095.09	$ 2101.59
			W	B2CCC-2454-TTBPGNWN R	2102.14	2108.64	2138.53	2145.03
			Q	B2CCC-2454-TTBPGNQN R	2117.95	2124.45	2154.34	2160.84
30”(762mm)W File/File Left/24”(610mm)W Open Right								
28”(711mm)	16”(406mm)	54”(1372mm)	7,8,9	B2CEC-1654-TTBPGN N R	$ 1888.85	$ 1895.35	$ 1921.18	$ 1927.68
			W	B2CEC-1654-TTBPGNWN R	1917.81	1924.31	1950.14	1956.64
			Q	B2CEC-1654-TTBPGNQN R	1928.35	1934.85	1960.68	1967.18
	24”(610mm)		7,8,9	B2CEC-2454-TTBPGN N R	$ 2020.51	$ 2027.01	$2056.90	$2063.40
			W	B2CEC-2454-TTBPGNWN R	2049.47	2055.97	2085.86	2092.36
			Q	B2CEC-2454-TTBPGNQN R	2060.01	2066.51	2096.40	2102.90
24”(610mm)W Open Left/30”(762mm)W Box/Box/File Right								
28”(711mm)	16”(406mm)	54”(1372mm)	7,8,9	B2CDC-1654-TTBPGN N R	$ 1927.04	$ 1933.54	$ 1959.37	$ 1965.87
			W	B2CDC-1654-TTBPGNWN R	1970.48	1976.98	2002.81	2009.31
			Q	B2CDC-1654-TTBPGNQN R	1986.29	1992.79	2018.62	2025.12
	24”(610mm)		7,8,9	B2CDC-2454-TTBPGN N R	$2058.70	$2065.20	$2095.09	$ 2101.59
			W	B2CDC-2454-TTBPGNWN R	2102.14	2108.64	2138.53	2145.03
			Q	B2CDC-2454-TTBPGNQN R	2117.95	2124.45	2154.34	2160.84
24”(610mm)W Open Left/30”(762mm)W File/File Right								
28”(711mm)	16”(406mm)	54”(1372mm)	7,8,9	B2CFC-1654-TTBPGN N R	$ 1888.85	$ 1895.35	$ 1921.18	$ 1927.68
			W	B2CFC-1654-TTBPGNWN R	1917.81	1924.31	1950.14	1956.64
			Q	B2CFC-1654-TTBPGNQN R	1928.35	1934.85	1960.68	1967.18
	24”(610mm)		7,8,9	B2CFC-2454-TTBPGN N R	$ 2020.51	$ 2027.01	$2056.90	$2063.40
			W	B2CFC-2454-TTBPGNWN R	2049.47	2055.97	2085.86	2092.36
			Q	B2CFC-2454-TTBPGNQN R	2060.01	2066.51	2096.40	2102.90

Modular Lower Storage

2H Credenza - Preconfigured - Attached

Height	Depth	Width	Pull	Number ❶ ❷	Case TFL A Front TFL A	Case TFL A Front TFL B	Case TFL B Front TFL A	Case TFL B Front TFL B
60”(1524mm)W								
30”(762mm)W Box/Box/File Left/30”(762mm)W Open Right								
28”(711mm)	16”(406mm)	60”(1524mm)	7,8,9	B2CCC-1660-TTBPGN N R	$ 1966.54	$ 1973.04	$ 1999.82	$2006.32
			W	B2CCC-1660-TTBPGNWN R	2009.98	2016.48	2043.26	2049.76
			Q	B2CCC-1660-TTBPGNQN R	2025.79	2032.29	2059.07	2065.57
	24”(610mm)		7,8,9	B2CCC-2460-TTBPGN N R	$2098.20	$ 2104.70	$ 2135.54	$ 2142.04
			W	B2CCC-2460-TTBPGNWN R	2141.64	2148.14	2178.98	2185.48
			Q	B2CCC-2460-TTBPGNQN R	2157.45	2163.95	2194.79	2201.29
30”(762mm)W File/File Left/30”(762mm)W Open Right								
28”(711mm)	16”(406mm)	60”(1524mm)	7,8,9	B2CEC-1660-TTBPGN N R	$ 1928.35	$ 1934.85	$ 1961.63	$ 1968.13
			W	B2CEC-1660-TTBPGNWN R	1957.31	1963.81	1990.59	1997.09
			Q	B2CEC-1660-TTBPGNQN R	1967.85	1974.35	2001.13	2007.63
	24”(610mm)		7,8,9	B2CEC-2460-TTBPGN N R	$ 2060.01	$ 2066.51	$ 2097.35	$ 2103.85
			W	B2CEC-2460-TTBPGNWN R	2088.97	2095.47	2126.31	2132.81
			Q	B2CEC-2460-TTBPGNQN R	2099.51	2106.01	2136.85	2143.35
30”(762mm)W Open Left/30”(762mm)W Box/Box/File Right								
28”(711mm)	16”(406mm)	60”(1524mm)	7,8,9	B2CDC-1660-TTBPGN N R	$ 1966.54	$ 1973.04	$ 1999.82	$2006.32
			W	B2CDC-1660-TTBPGNWN R	2009.98	2016.48	2043.26	2049.76
			Q	B2CDC-1660-TTBPGNQN R	2025.79	2032.29	2059.07	2065.57
	24”(610mm)		7,8,9	B2CDC-2460-TTBPGN N R	$2098.20	$ 2104.70	$ 2135.54	$ 2142.04
			W	B2CDC-2460-TTBPGNWN R	2141.64	2148.14	2178.98	2185.48
			Q	B2CDC-2460-TTBPGNQN R	2157.45	2163.95	2194.79	2201.29
30”(762mm)W Open Left/30”(762mm)W File/File Right								
28”(711mm)	16”(406mm)	60”(1524mm)	7,8,9	B2CFC-1660-TTBPGN N R	$ 1928.35	$ 1934.85	$ 1961.63	$ 1968.13
			W	B2CFC-1660-TTBPGNWN R	1957.31	1963.81	1990.59	1997.09
			Q	B2CFC-1660-TTBPGNQN R	1967.85	1974.35	2001.13	2007.63
	24”(610mm)		7,8,9	B2CFC-2460-TTBPGN N R	$ 2060.01	$ 2066.51	$ 2097.35	$ 2103.85
			W	B2CFC-2460-TTBPGNWN R	2088.97	2095.47	2126.31	2132.81
			Q	B2CFC-2460-TTBPGNQN R	2099.51	2106.01	2136.85	2143.35
66”(1676mm)W								
36”(914mm)W Box/Box/File Left/30”(762mm)W Open Right								
28”(711mm)	16”(406mm)	66”(1676mm)	7,8,9	B2CCD-1666-TTBPGN N R	$ 2102.13	$ 2109.93	$ 2136.36	$ 2144.16
			W	B2CCD-1666-TTBPGNWN R	2145.57	2153.37	2179.80	2187.60
			Q	B2CCD-1666-TTBPGNQN R	2161.38	2169.18	2195.61	2203.41
	24”(610mm)		7,8,9	B2CCD-2466-TTBPGN N R	$ 2233.79	$ 2241.59	$ 2272.08	$ 2279.88
			W	B2CCD-2466-TTBPGNWN R	2277.23	2285.03	2315.52	2323.32
			Q	B2CCD-2466-TTBPGNQN R	2293.04	2300.84	2331.33	2339.13
36”(914mm)W File/File Left/30”(762mm)W Open Right								
28”(711mm)	16”(406mm)	66”(1676mm)	7,8,9	B2CED-1666-TTBPGN N R	$2063.94	$ 2071.74	$ 2098.17	$ 2105.97
			W	B2CED-1666-TTBPGNWN R	2092.90	2100.70	2127.13	2134.93
			Q	B2CED-1666-TTBPGNQN R	2103.44	2111.24	2137.67	2145.47
	24”(610mm)		7,8,9	B2CED-2466-TTBPGN N R	$ 2195.60	$2203.40	$ 2233.89	$ 2241.69
			W	B2CED-2466-TTBPGNWN R	2224.56	2232.36	2262.85	2270.65
			Q	B2CED-2466-TTBPGNQN R	2235.10	2242.90	2273.39	2281.19

Modular Lower Storage

2H Credenza - Preconfigured - Attached

Height	Depth	Width	Pull	Number ❶ ❷	Case TFL A Front TFL A	Case TFL A Front TFL B	Case TFL B Front TFL A	Case TFL B Front TFL B
66”(1676mm)W								
30”(762mm)W Open Left/36”(914mm)W Box/Box/File Right								
28”(711mm)	16”(406mm)	66”(1676mm)	7,8,9	B2CDD-1666-TTBPGN N R	$ 2102.13	$ 2109.93	$ 2136.36	$ 2144.16
			W	B2CDD-1666-TTBPGNWN R	2145.57	2153.37	2179.80	2187.60
			Q	B2CDD-1666-TTBPGNQN R	2161.38	2169.18	2195.61	2203.41
	24”(610mm)		7,8,9	B2CDD-2466-TTBPGN N R	$ 2233.79	$ 2241.59	$ 2272.08	$ 2279.88
			W	B2CDD-2466-TTBPGNWN R	2277.23	2285.03	2315.52	2323.32
			Q	B2CDD-2466-TTBPGNQN R	2293.04	2300.84	2331.33	2339.13
30”(762mm)W Open Left/36”(914mm)W File/File Right								
28”(711mm)	16”(406mm)	66”(1676mm)	7,8,9	B2CFD-1666-TTBPGN N R	$ 2063.94	$ 2071.74	$ 2098.17	$ 2105.97
			W	B2CFD-1666-TTBPGNWN R	2092.90	2100.70	2127.13	2134.93
			Q	B2CFD-1666-TTBPGNQN R	2103.44	2111.24	2137.67	2145.47
	24”(610mm)		7,8,9	B2CFD-2466-TTBPGN N R	$ 2195.60	$ 2203.40	$ 2233.89	$ 2241.69
			W	B2CFD-2466-TTBPGNWN R	2224.56	2232.36	2262.85	2270.65
			Q	B2CFD-2466-TTBPGNQN R	2235.10	2242.90	2273.39	2281.19
72”(1829mm)W								
36”(914mm)W Box/Box/File Left/36”(914mm)W Open Right								
28”(711mm)	16”(406mm)	72”(1829mm)	7,8,9	B2CCD-1672-TTBPGN N R	$ 2141.63	$ 2149.43	$ 2176.81	$ 2184.61
			W	B2CCD-1672-TTBPGNWN R	2185.07	2192.87	2220.25	2228.05
			Q	B2CCD-1672-TTBPGNQN R	2200.88	2208.68	2236.06	2243.86
	24”(610mm)		7,8,9	B2CCD-2472-TTBPGN N R	$ 2273.29	$ 2281.09	$ 2312.53	$ 2320.33
			W	B2CCD-2472-TTBPGNWN R	2316.73	2324.53	2355.97	2363.77
			Q	B2CCD-2472-TTBPGNQN R	2332.54	2340.34	2371.78	2379.58
36”(914mm)W File/File Left/36”(914mm)W Open Right								
28”(711mm)	16”(406mm)	72”(1829mm)	7,8,9	B2CED-1672-TTBPGN N R	$ 2103.44	$ 2111.24	$ 2138.62	$ 2146.42
			W	B2CED-1672-TTBPGNWN R	2132.40	2140.20	2167.58	2175.38
			Q	B2CED-1672-TTBPGNQN R	2142.94	2150.74	2178.12	2185.92
	24”(610mm)		7,8,9	B2CED-2472-TTBPGN N R	$ 2235.10	$ 2242.90	$ 2274.34	$ 2282.14
			W	B2CED-2472-TTBPGNWN R	2264.06	2271.86	2303.30	2311.10
			Q	B2CED-2472-TTBPGNQN R	2274.60	2282.40	2313.84	2321.64
36”(914mm)W Open Left/36”(914mm)W Box/Box/File Right								
28”(711mm)	16”(406mm)	72”(1829mm)	7,8,9	B2CDD-1672-TTBPGN N R	$ 2141.63	$ 2149.43	$ 2176.81	$ 2184.61
			W	B2CDD-1672-TTBPGNWN R	2185.07	2192.87	2220.25	2228.05
			Q	B2CDD-1672-TTBPGNQN R	2200.88	2208.68	2236.06	2243.86
	24”(610mm)		7,8,9	B2CDD-2472-TTBPGN N R	$ 2273.29	$ 2281.09	$ 2312.53	$ 2320.33
			W	B2CDD-2472-TTBPGNWN R	2316.73	2324.53	2355.97	2363.77
			Q	B2CDD-2472-TTBPGNQN R	2332.54	2340.34	2371.78	2379.58
36”(914mm)W Open Left/36”(914mm)W File/File Right								
28”(711mm)	16”(406mm)	72”(1829mm)	7,8,9	B2CFD-1672-TTBPGN N R	$ 2103.44	$ 2111.24	$ 2138.62	$ 2146.42
			W	B2CFD-1672-TTBPGNWN R	2132.40	2140.20	2167.58	2175.38
			Q	B2CFD-1672-TTBPGNQN R	2142.94	2150.74	2178.12	2185.92
	24”(610mm)		7,8,9	B2CFD-2472-TTBPGN N R	$ 2235.10	$ 2242.90	$ 2274.34	$ 2282.14
			W	B2CFD-2472-TTBPGNWN R	2264.06	2271.86	2303.30	2311.10
			Q	B2CFD-2472-TTBPGNQN R	2274.60	2282.40	2313.84	2321.64

Modular Lower Storage

1.5H Credenza - Preconfigured - Mobile

Drawers

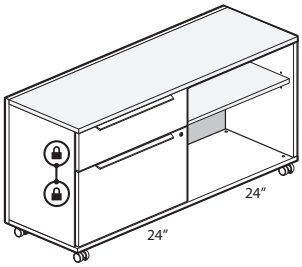

B2CAB-TTBP
Class BH – Open Market

Features

- Includes thermally fused laminate (TFL) case with lateral file, one adjustable TFL shelf, locking casters and finished 0.75"(19mm) thick top.
- TFL shelf matches case.
- Drawers have full extension steel ball-bearing slides. Drawer depth is 12"(305mm).
- Drawer pull options include Crescent, Linear, Classic, Blade, and Wing.
  –Crescent, Linear and Classic pulls are brushed nickel finish.
  –Blade and Wing pulls are specifiable trim color.
- Height adjustable shelf mounts into designated mounting locations. See Product Details.
- Available locking or non-locking.
- Single lock secures all drawers.
- Lock plug available in black or chrome.
- Not for use with digital locks.
- For lock options, refer to Lock Program section of the Accessories Price List.

Specification Tips

- 1.5H Mobile Storage Credenza is for use in the following applications:
  –As a single stand alone credenza.
- For use with separately specified:
  –24"(610mm)W Filing and Storage Cushion Top to create a half cushion top application.
- Not for use with:
  –Personal Drawer
  –TFL Accessory Shelf
  –Be_Hold Storage legs
  –Ganging Brackets
- Box drawer for use with separately specified accessories:
  –Drawer Tray
  –Drawer Liner
  –Drawer Dividers
  –Organizational Rings
  –Personal Tray
  –Pencil Tray
- File drawer accommodates front-to-back and side-to-side letter filing and front-to-back legal filing with included hanging bars.
- Refer to Specification Guide for product application information.

To Order, Specify:

1) Product number, including:
❶ **Pull Option:** (see side bar)
❷ **Lock Option:**
  N No Lock
  Y Lock (add **$43.46** list)
2) TFL case color.
3) TFL front color.
4) Trim color for pull (Blade and Wing).
5) Trim color for lock plug (if applicable).

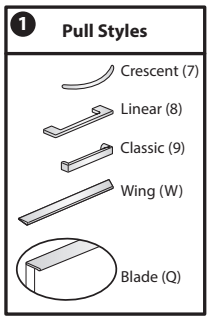

Height	Depth	Width	Pull	Number ❶ ❷	Case TFL A Front TFL A	Case TFL A Front TFL B	Case TFL B Front TFL A	Case TFL B Front TFL B
48"(1219mm)W								
24"(610mm) Box/File Left / 24"(610mm) Open Right								
22"(559mm)	16"(406mm)	48"(1219mm)	7,8,9	B2CAB-1648-TTBPCN N R	$1506.03	$ 1510.07	$ 1531.22	$1535.26
			W	B2CAB-1648-TTBPCNWN R	1534.99	1539.03	1560.18	1564.22
			Q	B2CAB-1648-TTBPCNQN R	1545.53	1549.57	1570.72	1574.76
24"(610mm) Open Left / 24"(610mm) Box/File Right								
22"(559mm)	16"(406mm)	48"(1219mm)	7,8,9	B2CBB-1648-TTBPCN N R	$1506.03	$ 1510.07	$ 1531.22	$1535.26
			W	B2CBB-1648-TTBPCNWN R	1534.99	1539.03	1560.18	1564.22
			Q	B2CBB-1648-TTBPCNQN R	1545.53	1549.57	1570.72	1574.76

Modular Lower Storage

1.5H Storage for Height Adjustable Table - Preconfigured - Attached

Open Cabinet

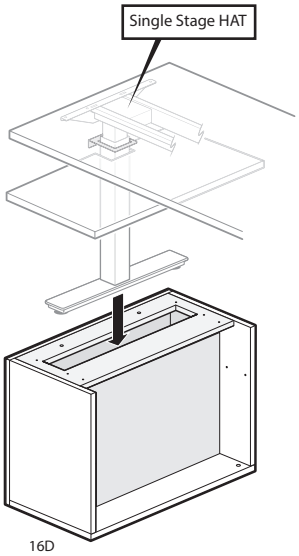

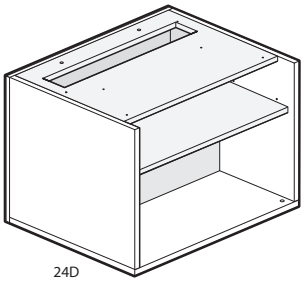

B2B22X-TTPY
Class BH – Open Market

Features

- Includes thermally fused laminate (TFL) cabinet, glides, removable inner back and unfinished top.
- Height Adjustable Leg option accommodates single stage height adjustable Planes or Upside table.
- 24"(610mm)D cabinet includes one TFL shelf. Shelf matches cabinet. 16"(406mm)D cabinet standard with no shelf. Separately specified steel shelf available (BASB-0630-S / BASB-0636-S).
- Top is predrilled to accept a separately specified Modular Storage Top or Common Top.
- Glides provide 1"(25mm) leveling adjustment range.
- Inner back is removable for access to HAT leg and for wire management.

Specification Tips

- 1.5H Attached Modular Lower Storage units are for use in the following applications:
  –As a single storage unit; requires a separately specified 0.75"(19mm) thick Modular Storage Top.
- Requires a separately specified Planes or Upside Single Stage Height Adjustable Table. Refer to Height Adjustable Tables Price Book for product numbers.
- Height Adjustable Table attachment bracket and bezel are separately specified.
- One of the HAT legs is field installed in the back of the cabinet converting the table into a height adjustable convergent worksurface application.
- The unfinished top is standard with cutout for HAT leg location; HAT table end will allow pinch point clearance and accommodates cable routing.
- Separately specified top requires field cut notch for HAT leg installation (Separately specified bezel will cover notched cutout).
- 30"(762mm)W cabinet accommodates a 23"(584mm)D height adjustable table (HAT) only.
- 36"(914mm)W cabinet accommodates a 23"(584mm)D or 29"(737mm)D height adjustable table (HAT).
- Power/No Power Cutout functional option:
  –Specify (Y) for two cutouts in the back to allow wire management. Power cutouts will correspond with height of Compose base raceway.
  –Specify (N) for standard back without wire management cutouts.
- Not for use with:
  –Storage Cushion
  –Be_Hold Storage legs
  –Stack-On Storage; Stack-On Storage may not be used on HAT.
- Refer to Specification Guide for product application information.

To Order, Specify:

1) Product number, including:

❶ **Power Cutout:**

- **N** No Power Cutout
- **Y** Power Cutout (add **$19.88** list)

2) TFL case color.

Height	Depth	Width	Number	TFL A	TFL B
22"(559mm)	16"(406mm)	30"(762mm)	B2B22X-1630-TTPY	$ 970.98	$993.42
		36"(914mm)	B2B22X-1636-TTPY	1006.73	1031.67
	24"(610mm)	30"(762mm)	B2B22X-2430-TTPY	1082.25	1112.42
		36"(914mm)	B2B22X-2436-TTPY	1141.84	1176.17

Modular Lower Storage

1.5H Credenza for Height Adjustable Table - Preconfigured - Attached

Drawers

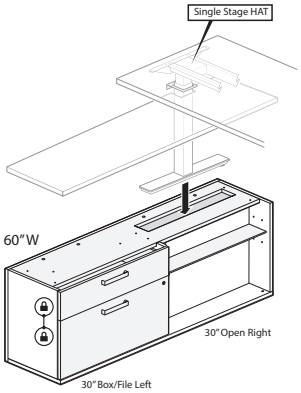

B2CYC-TTBP
Class BH – Open Market

Features

- Includes thermally fused laminate (TFL) case, box/file drawers, removable inner back, unfinished top and glides.
- Height Adjustable Table (HAT) option accommodates single stage height adjustable Planes or Upside table.
- 24"(610mm)D credenza includes one TFL shelf. Shelf matches case. 16"(406mm)D credenza standard with no shelf. Accommodates separately specified Credenza HAT Shelf.
- Top is predrilled for attachment of Common Top; Ordered separately.
- Drawers have full extension steel ball-bearing slides. Drawer depth is 12"(305mm).
- Drawer pull options include Crescent, Linear, Classic, Blade, and Wing.
  –Crescent, Linear, and Classic pulls are brushed nickel finish.
  –Blade and Wing pulls are specifiable trim color.
- Inner back is removable for access to HAT leg and for wire management.
- Available locking or non-locking.
- Single lock secures all drawers.
- Lock plug available in black or chrome.
- Not for use with digital locks.
- For lock options, refer to Lock Program section of the Accessories Price List.
- Glides provide 1"(25mm) leveling adjustment.

Specification Tips

- 1.5H Attached HAT Credenza with Drawers is for use in the following applications:
  –As a single credenza; requires a separately specified 0.75"(19mm) thick Common Top.
- Requires a separately specified Planes or Upside Single Stage Height Adjustable Table. Refer to Height Adjustable Tables Price Book for product numbers.
- Height Adjustable Table attachment bracket and bezel are separately specified.
- One of the HAT legs is field installed in the back of the Credenza converting the table into a height adjustable convergent worksurface application.
- 30"(762mm)W HAT side accommodates a 23"(584mm)D HAT only.
- 36"(914mm)W HAT side accommodates a 23"(584mm)D or 29"(737mm)D height adjustable table (HAT).
- The unfinished top is standard with cutout for HAT leg location; HAT table end will allow pinch point clearance and accommodates cable routing.
- Separately specified top requires field cut notch for HAT leg installation (Separately specified bezel will cover notched cutout).
- Power/No Power Cutout functional option:
  –Specify (Y) for one cutout in the inset back to allow wire management. Power cutouts will correspond with height of Compose base raceway.
  –Specify (N) for standard proud back without wire management cutouts.
- Storage cushion top may be used on the drawer side of the credenza.
- Not for use with:
  –Be_Hold Storage legs
  –Stack-On Storage; Stack-On Storage may not be used on HAT.
- Box drawer for use with separately specified accessories:
  –Drawer Tray
  –Drawer Liner
  –Drawer Dividers
  –Organizational Rings
  –Personal Tray
  –Pencil Tray
- File drawer accommodates front-to-back and side-to-side letter filing and front-to-back legal filing with included hanging bars.
- Refer to Specification Guide for product application information.

To Order, Specify:

1) Product number, including:

❶ **Pull Option:** (see side bar)

❷ **Power Cutout Options:**

- **N** No Power Cutout
- **Y** Power Cutout (add **$19.88** list)

❸ **Lock Option:**

- **N** No Lock
- **Y** Locking (add **$43.46** list)

2) TFL color for case.
3) TFL color for front.
4) Trim color for pull (Blade and Wing) if applicable.
5) Trim color for lock plug (if applicable).

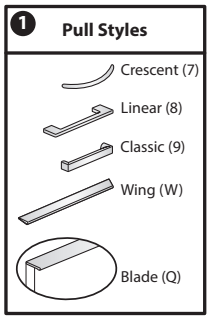

Modular Lower Storage

1.5H Credenza for Height Adjustable Table - Preconfigured - Attached

Height	Depth	Width	Pull	Number ❶❷❸	Case TFL A Front TFL A	Case TFL A Front TFL B	Case TFL B Front TFL A	Case TFL B Front TFL B
60”(1524mm)W								
30”(762mm) Box/File Left/30”(762mm) Open Right								
22”(559mm)	16”(406mm)	60”(1524mm)	7,8,9	B2CYC-1660-TTBPGY R	$ 1880.14	$ 1885.19	$ 1907.23	$ 1912.28
			W	B2CYC-1660-TTBPGYW R	1909.10	1914.15	1936.19	1941.24
			Q	B2CYC-1660-TTBPGYQ R	1919.64	1924.69	1946.73	1951.78
	24”(610mm)		7,8,9	B2CYC-2460-TTBPGY R	$ 2011.80	$ 2016.85	$2042.95	$2048.00
			W	B2CYC-2460-TTBPGYW R	2040.76	2045.81	2071.91	2076.96
			Q	B2CYC-2460-TTBPGYQ R	2051.30	2056.35	2082.45	2087.50
30”(762mm) Open Left/30”(762mm) Box/File Right								
22”(559mm)	16”(406mm)	60”(1524mm)	7,8,9	B2CZC-1660-TTBPGY R	$ 1880.14	$ 1885.19	$ 1907.23	$ 1912.28
			W	B2CZC-1660-TTBPGYW R	1909.10	1914.15	1936.19	1941.24
			Q	B2CZC-1660-TTBPGYQ R	1919.64	1924.69	1946.73	1951.78
	24”(610mm)		7,8,9	B2CZC-2460-TTBPGY R	$ 2011.80	$ 2016.85	$2042.95	$2048.00
			W	B2CZC-2460-TTBPGYW R	2040.76	2045.81	2071.91	2076.96
			Q	B2CZC-2460-TTBPGYQ R	2051.30	2056.35	2082.45	2087.50
66”(1676mm)W								
30”(762mm) Box/File Left/36”(914mm) Open Right								
22”(559mm)	16”(406mm)	66”(1676mm)	7,8,9	B2CYC-1666-TTBPGY R	$ 1919.64	$ 1924.69	$ 1947.68	$ 1952.73
			W	B2CYC-1666-TTBPGYW R	1948.60	1953.65	1976.64	1981.69
			Q	B2CYC-1666-TTBPGYQ R	1959.14	1964.19	1987.18	1992.23
	24”(610mm)		7,8,9	B2CYC-2466-TTBPGY R	$ 2051.30	$2056.35	$2083.40	$ 2088.45
			W	B2CYC-2466-TTBPGYW R	2080.26	2085.31	2112.36	2117.41
			Q	B2CYC-2466-TTBPGYQ R	2090.80	2095.85	2122.90	2127.95
36”(914mm) Open Left/30”(762mm) Box/File Right								
22”(559mm)	16”(406mm)	66”(1676mm)	7,8,9	B2CZC-1666-TTBPGY R	$ 1919.64	$ 1924.69	$ 1947.68	$ 1952.73
			W	B2CZC-1666-TTBPGYW R	1948.60	1953.65	1976.64	1981.69
			Q	B2CZC-1666-TTBPGYQ R	1959.14	1964.19	1987.18	1992.23
	24”(610mm)		7,8,9	B2CZC-2466-TTBPGY R	$ 2051.30	$2056.35	$2083.40	$ 2088.45
			W	B2CZC-2466-TTBPGYW R	2080.26	2085.31	2112.36	2117.41
			Q	B2CZC-2466-TTBPGYQ R	2090.80	2095.85	2122.90	2127.95
36”(914mm) Box/File Left/30”(762mm) Open Right								
22”(559mm)	16”(406mm)	66”(1676mm)	7,8,9	B2CYD-1666-TTBPGY R	$ 2013.11	$ 2019.17	$ 2041.15	$ 2047.21
			W	B2CYD-1666-TTBPGYW R	2042.07	2048.13	2070.11	2076.17
			Q	B2CYD-1666-TTBPGYQ R	2052.61	2058.67	2080.65	2086.71
	24”(610mm)		7,8,9	B2CYD-2466-TTBPGY R	$ 2144.77	$ 2150.83	$ 2176.87	$ 2182.93
			W	B2CYD-2466-TTBPGYW R	2173.73	2179.79	2205.83	2211.89
			Q	B2CYD-2466-TTBPGYQ R	2184.27	2190.33	2216.37	2222.43
30”(762mm) Open Left/36”(914mm) Box/File Right								
22”(559mm)	16”(406mm)	66”(1676mm)	7,8,9	B2CZD-1666-TTBPGY R	$ 2013.11	$ 2019.17	$ 2041.15	$ 2047.21
			W	B2CZD-1666-TTBPGYW R	2042.07	2048.13	2070.11	2076.17
			Q	B2CZD-1666-TTBPGYQ R	2052.61	2058.67	2080.65	2086.71
	24”(610mm)		7,8,9	B2CZD-2466-TTBPGY R	$ 2144.77	$ 2150.83	$ 2176.87	$ 2182.93
			W	B2CZD-2466-TTBPGYW R	2173.73	2179.79	2205.83	2211.89
			Q	B2CZD-2466-TTBPGYQ R	2184.27	2190.33	2216.37	2222.43

Modular Lower Storage

1.5H Credenza for Height Adjustable Table - Preconfigured - Attached

Height	Depth	Width	Pull	Number ❶❷❸	Case TFL A Front TFL A	Case TFL A Front TFL B	Case TFL B Front TFL A	Case TFL B Front TFL B
72”(1829mm)W								
36”(914mm) Box/File Left/36”(914mm) Open Right								
22”(559mm)	16”(406mm)	72”(1829mm)	7,8,9	B2CYD-1672-TTBPGY R	$ 2052.61	$ 2058.67	$ 2081.60	$ 2087.66
			W	B2CYD-1672-TTBPGYW R	2081.57	2087.63	2110.56	2116.62
			Q	B2CYD-1672-TTBPGYQ R	2092.11	2098.17	2121.10	2127.16
	24”(610mm)		7,8,9	B2CYD-2472-TTBPGY R	$ 2184.27	$ 2190.33	$ 2217.32	$ 2223.38
			W	B2CYD-2472-TTBPGYW R	2213.23	2219.29	2246.28	2252.34
			Q	B2CYD-2472-TTBPGYQ R	2223.77	2229.83	2256.82	2262.88
36”(914mm) Open Left/36”(914mm) Box/File Right								
22”(559mm)	16”(406mm)	72”(1829mm)	7,8,9	B2CZD-1672-TTBPGY R	$ 2052.61	$ 2058.67	$ 2081.60	$ 2087.66
			W	B2CZD-1672-TTBPGYW R	2081.57	2087.63	2110.56	2116.62
			Q	B2CZD-1672-TTBPGYQ R	2092.11	2098.17	2121.10	2127.16
	24”(610mm)		7,8,9	B2CZD-2472-TTBPGY R	$ 2184.27	$ 2190.33	$ 2217.32	$ 2223.38
			W	B2CZD-2472-TTBPGYW R	2213.23	2219.29	2246.28	2252.34
			Q	B2CZD-2472-TTBPGYQ R	2223.77	2229.83	2256.82	2262.88
42”(1067mm) Box/File Left/30”(762mm) Open Right								
22”(559mm)	16”(406mm)	72”(1829mm)	7,8,9	B2CYE-1672-TTBPGY R	$ 2192.17	$ 2199.24	$ 2221.16	$ 2228.23
			W	B2CYE-1672-TTBPGYW R	2221.13	2228.20	2250.12	2257.19
			Q	B2CYE-1672-TTBPGYQ R	2231.67	2238.74	2260.66	2267.73
	24”(610mm)		7,8,9	B2CYE-2472-TTBPGY R	$2323.83	$2330.90	$2356.88	$2363.95
			W	B2CYE-2472-TTBPGYW R	2352.79	2359.86	2385.84	2392.91
			Q	B2CYE-2472-TTBPGYQ R	2363.33	2370.40	2396.38	2403.45
30”(762mm) Open Left/42”(1067mm) Box/File Right								
22”(559mm)	16”(406mm)	72”(1829mm)	7,8,9	B2CZE-1672-TTBPGY R	$ 2192.17	$ 2199.24	$ 2221.16	$ 2228.23
			W	B2CZE-1672-TTBPGYW R	2221.13	2228.20	2250.12	2257.19
			Q	B2CZE-1672-TTBPGYQ R	2231.67	2238.74	2260.66	2267.73
	24”(610mm)		7,8,9	B2CZE-2472-TTBPGY R	$2323.83	$2330.90	$2356.88	$2363.95
			W	B2CZE-2472-TTBPGYW R	2352.79	2359.86	2385.84	2392.91
			Q	B2CZE-2472-TTBPGYQ R	2363.33	2370.40	2396.38	2403.45
78”(1981mm)W								
42”(1067mm) Box/File Left/36”(914mm) Open Right								
22”(559mm)	16”(406mm)	78”(1981mm)	7,8,9	B2CYE-1678-TTBPGY R	$ 2231.67	$ 2238.74	$ 2261.61	$ 2268.68
			W	B2CYE-1678-TTBPGYW R	2260.63	2267.70	2290.57	2297.64
			Q	B2CYE-1678-TTBPGYQ R	2271.17	2278.24	2301.11	2308.18
	24”(610mm)		7,8,9	B2CYE-2478-TTBPGY R	$2363.33	$2370.40	$2397.33	$2404.40
			W	B2CYE-2478-TTBPGYW R	2392.29	2399.36	2426.29	2433.36
			Q	B2CYE-2478-TTBPGYQ R	2402.83	2409.90	2436.83	2443.90
36”(914mm) Open Left/42”(1067mm) Box/File Right								
22”(559mm)	16”(406mm)	78”(1981mm)	7,8,9	B2CZE-1678-TTBPGY R	$ 2231.67	$ 2238.74	$ 2261.61	$ 2268.68
			W	B2CZE-1678-TTBPGYW R	2260.63	2267.70	2290.57	2297.64
			Q	B2CZE-1678-TTBPGYQ R	2271.17	2278.24	2301.11	2308.18
	24”(610mm)		7,8,9	B2CZE-2478-TTBPGY R	$2363.33	$2370.40	$2397.33	$2404.40
			W	B2CZE-2478-TTBPGYW R	2392.29	2399.36	2426.29	2433.36
			Q	B2CZE-2478-TTBPGYQ R	2402.83	2409.90	2436.83	2443.90

Modular Lower Storage Tops

1.5H Height Adjustable Table Storage Top - Laminate - 0.75” Thick

HAT Storage Top

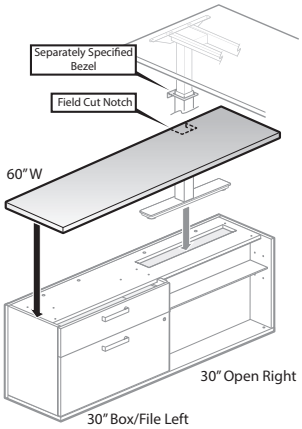

BMAL-YYYYS
CLASS BH

Features

- Includes one high-pressure laminate top (HPL) and attachment hardware.
- Top available in 0.75”(19mm) thickness with 1mm edge on all sides.
- Lower storage casegoods for HAT are predrilled to accept storage top.

Specification Tips

- Attaches to Be_Hold Be Modular Lower Storage Units for HAT.
- Top requires field cut notch for HAT leg installation; separately specified bezel covers field cut edge.

To Order, Specify:

1) Product number.
2) HPL color.
3) Edge color.

Depth	Width	Number	HPL A	B	E
16”(406mm)	30”(762mm)	BMAL-1630-YYYYS	$ 87.64	$ 92.26	$ 119.84
	36”(914mm)	BMAL-1636-YYYYS	96.84	102.12	133.64
	60”(1524mm)	BMAL-1660-YYYYS	147.44	156.35	209.54
	66”(1676mm)	BMAL-1666-YYYYS	161.24	171.14	230.24
	72”(1829mm)	BMAL-1672-YYYYS	170.44	181.00	244.04
	78”(1981mm)	BMAL-1678-YYYYS	184.24	195.79	264.74
24”(610mm)	30”(762mm)	BMAL-2430-YYYYS	$ 115.24	$ 121.84	$ 161.24
	36”(914mm)	BMAL-2436-YYYYS	133.64	141.56	188.84
	60”(1524mm)	BMAL-2460-YYYYS	207.24	220.44	299.24
	66”(1676mm)	BMAL-2466-YYYYS	225.64	240.16	326.84
	72”(1829mm)	BMAL-2472-YYYYS	244.04	259.88	354.44
	78”(1981mm)	BMAL-2478-YYYYS	262.44	279.60	382.04

Modular Lower Storage Tops

2H Storage Tops - Laminate - 1.18″ Thick

Pedestal Top

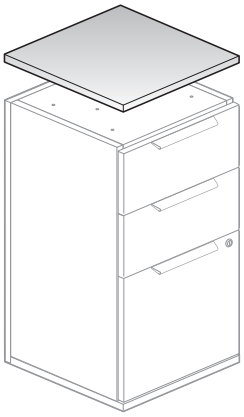

BMBL-JYJYS
Class BH

Features

- Includes one high-pressure laminate top (HPL) and attachment hardware.
- Top available in 1.18"(30mm) thickness with 3mm edge on front and back and 1mm edge on the sides.
- 2H unfinished pedestal tops are predrilled to accept pedestal top.

Specification Tips

- For use with a Be_Hold Be 2H Attached Pedestal in a stand alone application.

To Order, Specify:

1) Product number.
2) HPL color.
3) Edge color.

Depth	Width	Number	HPL A	B	E
16"(406mm)	15"(381mm)	BMBL-1615-JYJYS	$ 70.60	$ 75.88	$107.40
18"(457mm)	12"(305mm)	BMBL-1812-JYJYS	$ 59.44	$63.40	$ 87.04
	15"(381mm)	BMBL-1815-JYJYS	70.60	75.88	107.40
24"(610mm)	12"(305mm)	BMBL-2412-JYJYS	$ 70.60	$ 75.88	$107.40
	15"(381mm)	BMBL-2415-JYJYS	87.34	94.60	137.94
30"(762mm)	12"(305mm)	BMBL-3012-JYJYS	$ 81.76	$88.36	$ 127.76
	15"(381mm)	BMBL-3015-JYJYS	104.08	113.32	168.48

Filing and Storage Top

BMBL-JYJYS
Class BH

Features

- Includes one high-pressure laminate top (HPL) and attachment hardware.
- Top available in 1.18"(30mm) thickness with 3mm edge on front and back and 1mm edge on the sides.
- 2H lower storage casegoods are predrilled to accept storage top.

Specification Tips

- Attaches to the following Be_Hold Be 2H Modular Lower Storage Units: Lateral File, Hinged Door Storage and Open Cabinet.

To Order, Specify:

1) Product number.
2) HPL color.
3) Edge color.

Depth	Width	Number	HPL A	B	E
16"(406mm)	18"(457mm)	BMBL-1618-JYJYS	$ 70.60	$ 75.88	$ 107.40
	24"(610mm)	BMBL-1624-JYJYS	87.34	94.60	137.94
	30"(762mm)	BMBL-1630-JYJYS	104.08	113.32	168.48
	36"(914mm)	BMBL-1636-JYJYS	115.24	125.80	188.84
	42"(1067mm)	BMBL-1642-JYJYS	131.98	144.52	219.38
24"(610mm)	18"(457mm)	BMBL-2418-JYJYS	$ 92.92	$ 100.84	$ 148.12
	24"(610mm)	BMBL-2424-JYJYS	115.24	125.80	188.84
	30"(762mm)	BMBL-2430-JYJYS	137.56	150.76	229.56
	36"(914mm)	BMBL-2436-JYJYS	159.88	175.72	270.28
	42"(1067mm)	BMBL-2442-JYJYS	182.20	200.68	311.00

Modular Lower Storage Tops

Common Top - Laminate - 1.18” Thick

Common Top

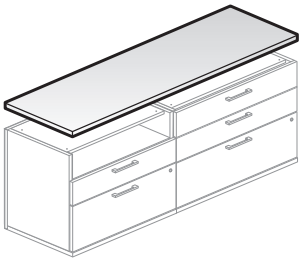

BMBL-JYJYS
Class BH

Features

- Includes one high-pressure laminate top (HPL) and attachment hardware. Top available in 1.18”(30mm) thickness with 3mm edge on front and back and 1mm edge on the sides.
- 2H modular lower storage units are predrilled to accept Common Top.

Specification Tips

- Attaches two or more same height modular lower storage units and/or a preconfigured credenza in a spanning top application.
- 16”(406mm)D and 24”(610mm)D common tops are for use in a single sided storage application; 32”(813mm)D and 48”(1219mm)D common tops are for use in double sided or back-to-back storage application.
- If spanning an open kneespace a worksurface reinforcement bar may be required, refer to the appropriate price list page spec tips and/or the specification guide for application information.
- Nominal storage widths may not match nominal top widths. Please see Product Details for actual dimensions.

To Order, Specify:

1) Product number.
2) HPL color.
3) Edge color.

Depth	Width	Number	HPL A	B	E
Application without 15”(381mm)W Pedestal					
16”(406mm)	48”(1219mm)	BMBL-1648-JYJYS	$ 148.72	$ 163.24	$249.92
	54”(1372mm)	BMBL-1654-JYJYS	159.88	175.72	270.28
	60”(1524mm)	BMBL-1660-JYJYS	176.62	194.44	300.82
	66”(1676mm)	BMBL-1666-JYJYS	193.36	213.16	331.36
	72”(1829mm)	BMBL-1672-JYJYS	204.52	225.64	351.72
	78”(1981mm)	BMBL-1678-JYJYS	221.26	244.36	382.26
	84”(2134mm)	BMBL-1684-JYJYS	238.00	263.08	412.80
	90”(2286mm)	BMBL-1690-JYJYS	249.16	275.56	433.16
	96”(2438mm)	BMBL-1696-JYJYS	265.90	294.28	463.70
	102”(2591mm)	BMBL-16A2-JYJYS	282.64	313.00	494.24
	108”(2743mm)	BMBL-16A8-JYJYS	293.80	325.48	514.60
	114”(2896mm)	BMBL-16B4-JYJYS	310.54	344.20	545.14
	120”(3048mm)	BMBL-16C0-JYJYS	327.28	362.92	575.68
24”(610mm)	48”(1219mm)	BMBL-2448-JYJYS	$204.52	$ 225.64	$ 351.72
	54”(1372mm)	BMBL-2454-JYJYS	226.84	250.60	392.44
	60”(1524mm)	BMBL-2460-JYJYS	249.16	275.56	433.16
	66”(1676mm)	BMBL-2466-JYJYS	271.48	300.52	473.88
	72”(1829mm)	BMBL-2472-JYJYS	293.80	325.48	514.60
	78”(1981mm)	BMBL-2478-JYJYS	316.12	350.44	555.32
	84”(2134mm)	BMBL-2484-JYJYS	338.44	375.40	596.04
	90”(2286mm)	BMBL-2490-JYJYS	360.76	400.36	636.76
	96”(2438mm)	BMBL-2496-JYJYS	383.08	425.32	677.48
	102”(2591mm)	BMBL-24A2-JYJYS	405.40	450.28	718.20
	108”(2743mm)	BMBL-24A8-JYJYS	427.72	475.24	758.92
	114”(2896mm)	BMBL-24B4-JYJYS	450.04	500.20	799.64
	120”(3048mm)	BMBL-24C0-JYJYS	472.36	525.16	840.36

Modular Lower Storage Tops

Common Top - Laminate - 1.18” Thick

Depth	Width	Number	HPL A	B	E
32”(813mm)	24”(610mm)	BMBL-3224-JYJYS	$ 148.72	$ 163.24	$ 249.92
	30”(762mm)	BMBL-3230-JYJYS	176.62	194.44	300.82
	36”(914mm)	BMBL-3236-JYJYS	204.52	225.64	351.72
	42”(1067mm)	BMBL-3242-JYJYS	238.00	263.08	412.80
	48”(1219mm)	BMBL-3248-JYJYS	265.90	294.28	463.70
	54”(1372mm)	BMBL-3254-JYJYS	293.80	325.48	514.60
	60”(1524mm)	BMBL-3260-JYJYS	327.28	362.92	575.68
	66”(1676mm)	BMBL-3266-JYJYS	355.18	394.12	626.58
	72”(1829mm)	BMBL-3272-JYJYS	383.08	425.32	677.48
	78”(1981mm)	BMBL-3278-JYJYS	416.56	462.76	738.56
	84”(2134mm)	BMBL-3284-JYJYS	444.46	493.96	789.46
	90”(2286mm)	BMBL-3290-JYJYS	472.36	525.16	840.36
	96”(2438mm)	BMBL-3296-JYJYS	505.84	562.60	901.44
	102”(2591mm)	BMBL-32A2-JYJYS	533.74	593.80	952.34
	108”(2743mm)	BMBL-32A8-JYJYS	561.64	625.00	1003.24
	114”(2896mm)	BMBL-32B4-JYJYS	595.12	662.44	1064.32
	120”(3048mm)	BMBL-32C0-JYJYS	623.02	693.64	1115.22
48”(1219mm)	24”(610mm)	BMBL-4824-JYJYS	$204.52	$ 225.64	$ 351.72
	30”(762mm)	BMBL-4830-JYJYS	249.16	275.56	433.16
	36”(914mm)	BMBL-4836-JYJYS	293.80	325.48	514.60
	42”(1067mm)	BMBL-4842-JYJYS	338.44	375.40	596.04
	48”(1219mm)	BMBL-4848-JYJYS	383.08	425.32	677.48
	54”(1372mm)	BMBL-4854-JYJYS	427.72	475.24	758.92
	60”(1524mm)	BMBL-4860-JYJYS	472.36	525.16	840.36
	66”(1676mm)	BMBL-4866-JYJYS	517.00	575.08	921.80
	72”(1829mm)	BMBL-4872-JYJYS	561.64	625.00	1003.24
	78”(1981mm)	BMBL-4878-JYJYS	606.28	674.92	1084.68
	84”(2134mm)	BMBL-4884-JYJYS	650.92	724.84	1166.12
	90”(2286mm)	BMBL-4890-JYJYS	695.56	774.76	1247.56
	96”(2438mm)	BMBL-4896-JYJYS	740.20	824.68	1329.00
	102”(2591mm)	BMBL-48A2-JYJYS	784.84	874.60	1410.44
	108”(2743mm)	BMBL-48A8-JYJYS	829.48	924.52	1491.88
	114”(2896mm)	BMBL-48B4-JYJYS	874.12	974.44	1573.32
	120”(3048mm)	BMBL-48C0-JYJYS	918.76	1024.36	1654.76

Modular Lower Storage Tops

Common Top - Laminate - 1.18” Thick

Depth	Width	Number	HPL A	B	E
Application with One 15”(381mm)W Pedestal					
16”(406mm)	34”(864mm)	BMBL-1634-JYJYS	$ 115.24	$ 125.80	$ 188.84
	40”(1016mm)	BMBL-1640-JYJYS	126.40	138.28	209.20
	46”(1168mm)	BMBL-1646-JYJYS	143.14	157.00	239.74
	52”(1321mm)	BMBL-1652-JYJYS	159.88	175.72	270.28
	58”(1473mm)	BMBL-1658-JYJYS	171.04	188.20	290.64
	64”(1626mm)	BMBL-1664-JYJYS	187.78	206.92	321.18
	70”(1778mm)	BMBL-1670-JYJYS	204.52	225.64	351.72
	76”(1930mm)	BMBL-1676-JYJYS	215.68	238.12	372.08
	82”(2083mm)	BMBL-1682-JYJYS	232.42	256.84	402.62
24”(610mm)	34”(864mm)	BMBL-2434-JYJYS	$ 154.30	$ 169.48	$ 260.10
	40”(1016mm)	BMBL-2440-JYJYS	176.62	194.44	300.82
	46”(1168mm)	BMBL-2446-JYJYS	198.94	219.40	341.54
	52”(1321mm)	BMBL-2452-JYJYS	221.26	244.36	382.26
	58”(1473mm)	BMBL-2458-JYJYS	243.58	269.32	422.98
	64”(1626mm)	BMBL-2464-JYJYS	265.90	294.28	463.70
	70”(1778mm)	BMBL-2470-JYJYS	288.22	319.24	504.42
	76”(1930mm)	BMBL-2476-JYJYS	310.54	344.20	545.14
	82”(2083mm)	BMBL-2482-JYJYS	332.86	369.16	585.86
Application with Two 15”(381mm)W Pedestals					
16”(406mm)	32”(813mm)	BMBL-1632-JYJYS	$ 109.66	$ 119.56	$ 178.66
	50”(1270mm)	BMBL-1650-JYJYS	154.30	169.48	260.10
	56”(1422mm)	BMBL-1656-JYJYS	165.46	181.96	280.46
	62”(1575mm)	BMBL-1662-JYJYS	182.20	200.68	311.00
	68”(1727mm)	BMBL-1668-JYJYS	198.94	219.40	341.54
	80”(2032mm)	BMBL-1680-JYJYS	226.84	250.60	392.44
24”(610mm)	32”(813mm)	BMBL-2432-JYJYS	$ 148.72	$ 163.24	$ 249.92
	50”(1270mm)	BMBL-2450-JYJYS	215.68	238.12	372.08
	56”(1422mm)	BMBL-2456-JYJYS	238.00	263.08	412.80
	62”(1575mm)	BMBL-2462-JYJYS	260.32	288.04	453.52
	68”(1727mm)	BMBL-2468-JYJYS	282.64	313.00	494.24
	80”(2032mm)	BMBL-2480-JYJYS	327.28	362.92	575.68
Application with Three 15”(381mm)W Pedestals					
16”(406mm)	47”(1194mm)	BMBL-1647-JYJYS	$ 143.14	$ 157.00	$ 239.74
24”(610mm)	47”(1194mm)	BMBL-2447-JYJYS	$204.52	$225.64	$ 351.72

Modular Lower Storage Cushions

Cushion Top

Pedestal Cushion Top

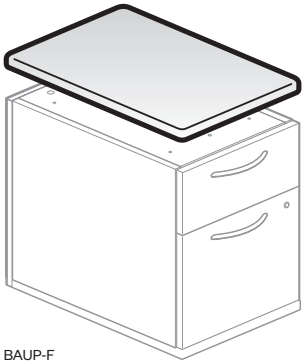

BAUP-F
Class BH

- Includes one 1.25”(32mm) thick cushion with hardware.
- Field installed.
- COM yardage:
  16”(406mm)D - 1.0 yd
  18”(457mm)D - 1.2 yd
  24”(610mm)D - 1.5 yd

Specification Tips

- For use with Be_Hold Be 1.5H Pedestal.
- Not for use with 2H Mobile or Attached pedestal.
- Cushion attaches to finished pedestal top; field drilling of holes required.

To Order, Specify:

1) Product number.
2) Fabric surface/color.

			Fabric							
Depth	**Width**	**Number**	**A**	**B**	**C**	**D**	**E**	**F**	**G**	**H**
16”(406mm)	15”(381mm)	BAUP-1615-F	$ 157.20	$268.79	$454.76	$640.72	$826.69	$ 1012.67	$ 1291.61	$1849.53
18”(457mm)	15”(381mm)	BAUP-1815-F	170.88	282.47	468.44	654.40	840.37	1026.35	1305.29	1863.21
24”(610mm)	15”(381mm)	BAUP-2415-F	232.38	343.97	529.94	715.90	901.87	1087.85	1366.79	1924.71

Filing and Storage Cushion Top

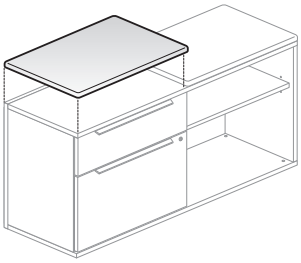

BAUF-F
Class BH

- Includes one 1.25”(32mm) thick cushion with attachment hardware.
- Field installed.
- COM yardage:

Depth	Width	Yardage
16”	18”	1.10
	24”	1.5
	30”	2.0
	36”	2.25
	42”	2.6
24”	18”	1.5
	24”	2.0
	30”	2.5
	36”	2.75
	42”	3.0

Specification Tips

- For use with Be_Hold Be 1.5H Modular Lower Storage Unit, or Preconfigured Credenza.
- Cushion may be used over matching width open storage, hinged or sliding door storage or above drawers. Cushion may be used above drawer section in HAT credenza.
- Not for use with 2H Modular Lower Storage.
- Cushion attaches to finished storage top; field drilling of holes required.

To Order, Specify:

1) Product number.
2) Fabric surface/color.

			Fabric							
Depth	**Width**	**Number**	**A**	**B**	**C**	**D**	**E**	**F**	**G**	**H**
16”(406mm)	18”(457mm)	BAUF-1618-F	$ 157.20	$ 268.79	$454.76	$640.72	$ 826.69	$ 1012.67	$ 1291.61	$ 1849.53
	24”(610mm)	BAUF-1624-F	174.36	285.95	471.92	657.88	843.85	1029.83	1308.77	1866.69
	30”(762mm)	BAUF-1630-F	191.40	302.99	488.96	674.92	860.89	1046.87	1325.81	1883.73
	36”(914mm)	BAUF-1636-F	208.56	320.15	506.12	692.08	878.05	1064.03	1342.97	1900.89
	42”(1067mm)	BAUF-1642-F	225.60	337.19	523.16	709.12	895.09	1081.07	1360.01	1917.93
24”(610mm)	18”(457mm)	BAUF-2418-F	$257.00	$368.59	$554.56	$ 740.52	$ 926.49	$ 1112.47	$ 1391.41	$ 1949.33
	24”(610mm)	BAUF-2424-F	281.70	393.29	579.26	765.22	951.19	1137.17	1416.11	1974.03
	30”(762mm)	BAUF-2430-F	306.23	417.82	603.79	789.75	975.72	1161.70	1440.64	1998.56
	36”(914mm)	BAUF-2436-F	330.93	442.52	628.49	814.45	1000.42	1186.40	1465.34	2023.26
	42”(1067mm)	BAUF-2442-F	355.46	467.05	653.02	838.98	1024.95	1210.93	1489.87	2047.79

Upper Storage

Stack-On Storage

Catalog Logic

B2 F 27 - 16 18 - T T L P 7 Y R

Product Line
(B2) Be_Hold Be

Product Type
(F) Stack-On Storage Cabinet
(N) Stack-On Bookcase

Height
For use with lower storage
1.5H
27”
35”
43”
2H
20”
28”
36”

Depth
16”

Width
18”
24”
30”
36”

Case Finish Type
(T) Thermally Fused Laminate - TFL

Front Finish Type
(N) No Front
(T) Thermally Fused Laminate - TFL

Handedness
(L) Left Hand
(R) Right Hand
(N) No Hand

Back
(P) Proud

Pull
(7) Crescent
(8) Linear
(9) Classic
(W) Wing
(N) No Pull

Lock Option
(Y) Locking
(N) No Lock

Close Type
(R) Regular Close

Upper Storage

Stack-On Bookcase - for 1.5H Lower Storage

Open

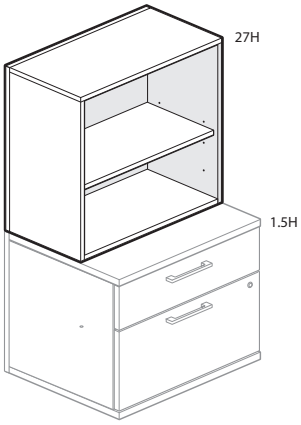

B2N27-TNN

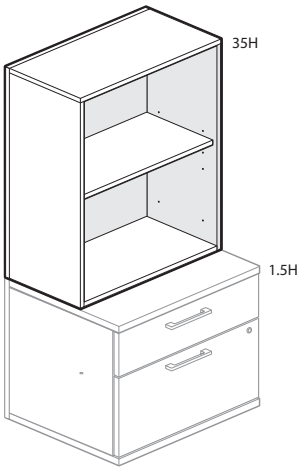

B2N35-TNN

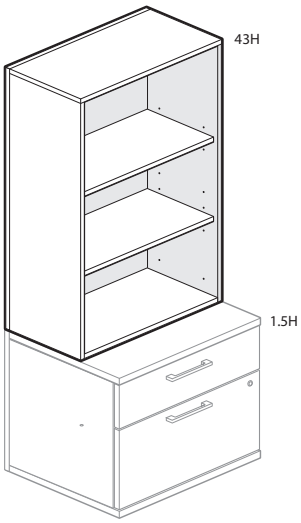

B2N43-TNN

Class BH - Open Market

Features

- Includes thermally fused laminate (TFL) case, shelf/shelves and proud back.
- Shelf quantities:
  –27"(686mm) and 35"(889mm)H include one adjustable shelf.
  –43"(1092mm)H includes two adjustable shelves.
- Shelves adjust in 1.25"(32mm) increments.

Specification Tips

- Designed for use on 1.5H Lower Storage.
- Depth of Stack-On Bookcase does not need to match depth of lower storage.
- TFL Accessory Shelf may be used; separately specified.
- Stack-On storage units are height specific for use with either 1.5H or 2H lower storage platforms and are not anchored to the building wall. Specify accordingly.
- Stack-On storage must be attached to a finished top and does not require field drilling; may not be installed on an unfinished lower storage top.
- Stack-On storage must be same width as modular lower storage or must match width of one unit within a preconfigured credenza and be attached to that unit.

To Order, Specify:

1) Product number.
2) TFL color.

Height	Depth	Width	Number	TFL A	TFL B
27"(686mm)	16"(406mm)	18"(457mm)	B2N27-1618-TNNPNNN	$ 595.51	$ 629.19
		24"(610mm)	B2N27-1624-TNNPNNN	660.51	703.86
		30"(762mm)	B2N27-1630-TNNPNNN	729.58	782.88
		36"(914mm)	B2N27-1636-TNNPNNN	778.34	838.46
35"(889mm)	16"(406mm)	18"(457mm)	B2N35-1618-TNNPNNN	$ 650.61	$ 687.73
		24"(610mm)	B2N35-1624-TNNPNNN	723.75	771.10
		30"(762mm)	B2N35-1630-TNNPNNN	796.89	854.47
		36"(914mm)	B2N35-1636-TNNPNNN	849.72	914.40
43"(1092mm)	16"(406mm)	18"(457mm)	B2N43-1618-TNNPNNN	$ 742.41	$ 783.05
		24"(610mm)	B2N43-1624-TNNPNNN	831.80	882.98
		30"(762mm)	B2N43-1630-TNNPNNN	921.19	982.91
		36"(914mm)	B2N43-1636-TNNPNNN	990.28	1059.68

Upper Storage

Stack-On Storage Cabinet - for 1.5H Lower Storage

Singled Hinged Door

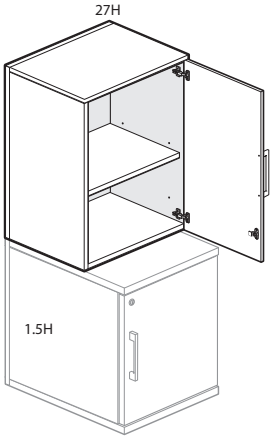

B2F27-TT

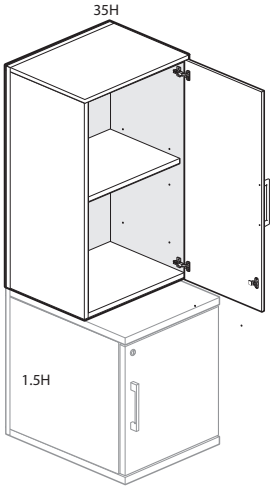

B2F35-TT

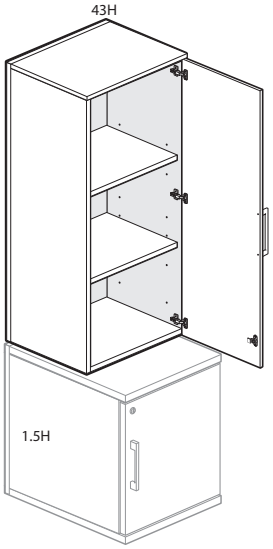

B2F43-TT

Class BH – Open Market

Features

- Includes thermally fused laminate (TFL) storage cabinet with shelf/shelves and left or right hand door with concealed hinges.
- Optional door pull options include Crescent, Linear, Classic, and Wing. Touch latch (no pull) option also available.
  –Crescent, Linear and Classic pulls are brushed nickel finish.
  –Wing pull available as specifiable trim color.
- Shelf quantities:
  –27"(686mm) and 35"(889mm)H include one adjustable shelf.
  –43"(1092mm)H includes two adjustable shelves.
- Shelves adjust in 1.25"(32mm) increments.
- Available locking or non-locking.
- Lock plug available in black or chrome.
- Not for use with digital locks.
- For lock options, refer to Lock Program section of the Accessories Price List.

Specification Tips

- Designed for use on 1.5H Lower Storage with 0.75"(19mm) thick finished Top.
- Depth of Stack-On Bookcase does not need to match depth of lower storage.
- TFL Accessory Shelf may be used; separately specified.
- Stack-On storage units are height specific for use with either 1.5H or 2H lower storage platforms and are not anchored to the building wall. Specify accordingly.
- Stack-On storage must be attached to a finished top and does not require field drilling; may not be installed on an unfinished lower storage top.
- Stack-On storage must be same width as modular lower storage or must match width of one unit within a preconfigured credenza and be attached to that unit.

To Order, Specify:

1) Product number, including:

❶ **Handedness Option:**
- **R** Right Hand
- **L** Left Hand

❷ **Pull Option:** (see side bar)

❸ **Lock Option:**
- **N** No Lock
- **Y** Lock (add **$43.46** list)

2) TFL color for case/shelves.
3) TFL color for front.
4) Trim color for Wing pull (if applicable).
5) Lock plug color (if applicable).

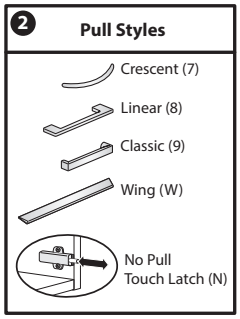

Height	Depth	Width	Pull	Number ❶❷❸	Case TFL A Front TFL A	Case TFL A Front TFL B	Case TFL B Front TFL A	Case TFL B Front TFL B
27"(686mm)	16"(406mm)	18"(457mm)	N	B2F27-1618-TT PN R	$ 597.52	$ 601.44	$ 631.20	$ 635.12
			7,8,9	B2F27-1618-TT P R	604.29	608.21	637.97	641.89
			W	B2F27-1618-TT PW R	619.19	623.11	652.87	656.79
35"(889mm)	16"(406mm)	18"(457mm)	N	B2F35-1618-TT PN R	$ 662.56	$ 667.60	$ 699.68	$ 704.72
			7,8,9	B2F35-1618-TT P R	669.33	674.37	706.45	711.49
			W	B2F35-1618-TT PW R	684.23	689.27	721.35	726.39
43"(1092mm)	16"(406mm)	18"(457mm)	N	B2F43-1618-TT PN R	$ 760.08	$ 766.24	$ 800.72	$ 806.88
			7,8,9	B2F43-1618-TT P R	766.85	773.01	807.49	813.65
			W	B2F43-1618-TT PW R	781.75	787.91	822.39	828.55

Upper Storage

Stack-On Storage Cabinet - for 1.5H Lower Storage

Double Hinged Door

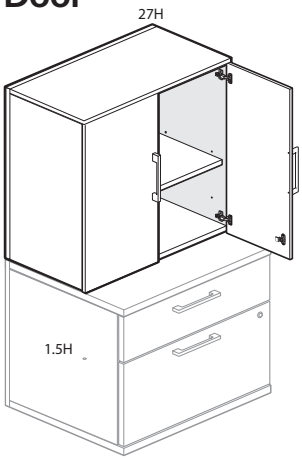

B2F27-TTN

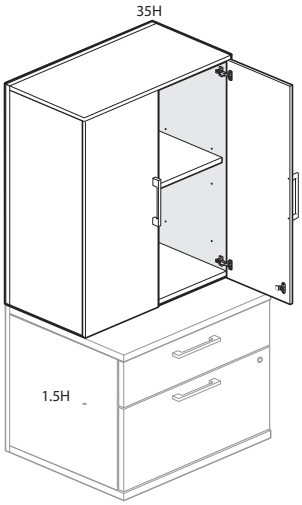

B2F35-TTN

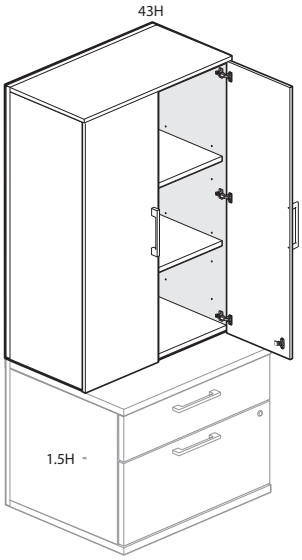

B2F43-TTN

Class BH – Open Market

Features

- Includes thermally fused laminate (TFL) storage cabinet with shelf/shelves and two TFL doors with concealed hinges.
- Optional door pull options include Crescent, Linear, Classic, and Wing. Touch latch (no pull) option also available. Wing pull will be on the right hand door only.
  –Crescent, Linear and Classic pulls are brushed nickel finish.
  –Wing pull available as specifiable trim color.
- Shelf quantities:
  –27"(686mm) and 35"(889mm)H include one adjustable shelf.
  –43"(1092mm)H includes two shelves.
- Shelves adjust in 1.25"(32mm) increments.
- Available locking or non-locking.
- Lock plug available in black or chrome.
- Not for use with digital locks.
- For lock options, refer to Lock Program section of the Accessories Price List.

Specification Tips

- Designed for use on 1.5H Lower Storage with 0.75"(19mm) thick finished Top.
- Depth of Stack-On Bookcase does not need to match depth of lower storage.
- TFL Accessory Shelf may be used; separately specified.
- Stack-On storage units are height specific for use with either 1.5H or 2H lower storage platforms and are not anchored to the building wall. Specify accordingly.
- Stack-On storage must be attached to a finished top and does not require field drilling; may not be installed on an unfinished lower storage top.
- Stack-On storage must be same width as modular lower storage or must match width of one unit within a preconfigured credenza and be attached to that unit.

To Order, Specify:

1) Product number, including:
   ❶ **Pull Option:** (see side bar)
   ❷ **Lock Option:**
   - **N** No Lock
   - **Y** Lock (add **$43.46** list)
2) TFL color for case/shelves.
3) TFL color for front.
4) Trim color for Wing pull (if applicable).
5) Lock plug color (if applicable).

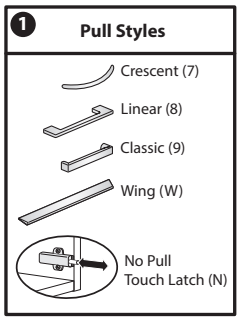

Height	Depth	Width	Pull	Number ❶❷	Case TFL A Front TFL A	Case TFL A Front TFL B	Case TFL B Front TFL A	Case TFL B Front TFL B
27"(686mm)	16"(406mm)	24"(610mm)	N	B2F27-1624-TTNPN R	$ 762.05	$ 767.09	$ 805.40	$ 810.44
			7,8,9	B2F27-1624-TTNP R	789.13	794.17	832.48	837.52
			W	B2F27-1624-TTNPW R	818.93	823.97	862.28	867.32
		30"(762mm)	N	B2F27-1630-TTNPN R	851.47	857.91	904.77	911.21
			7,8,9	B2F27-1630-TTNP R	878.55	884.99	931.85	938.29
			W	B2F27-1630-TTNPW R	908.35	914.79	961.65	968.09
		36"(914mm)	N	B2F27-1636-TTNPN R	916.51	924.07	976.63	984.19
			7,8,9	B2F27-1636-TTNP R	943.59	951.15	1003.71	1011.27
			W	B2F27-1636-TTNPW R	973.39	980.95	1033.51	1041.07
35"(889mm)	16"(406mm)	24"(610mm)	N	B2F35-1624-TTNPN R	$ 868.04	$ 874.76	$ 915.39	$ 922.11
			7,8,9	B2F35-1624-TTNP R	895.12	901.84	942.47	949.19
			W	B2F35-1624-TTNPW R	924.92	931.64	972.27	978.99
		30"(762mm)	N	B2F35-1630-TTNPN R	965.60	974.00	1023.18	1031.58
			7,8,9	B2F35-1630-TTNP R	992.68	1001.08	1050.26	1058.66
			W	B2F35-1630-TTNPW R	1022.48	1030.88	1080.06	1088.46
		36"(914mm)	N	B2F35-1636-TTNPN R	1038.78	1048.58	1103.46	1113.26
			7,8,9	B2F35-1636-TTNP R	1065.86	1075.66	1130.54	1140.34
			W	B2F35-1636-TTNPW R	1095.66	1105.46	1160.34	1170.14
43"(1092mm)	16"(406mm)	24"(610mm)	N	B2F43-1624-TTNPN R	$ 1010.54	$ 1018.66	$ 1061.72	$1069.84
			7,8,9	B2F43-1624-TTNP R	1037.62	1045.74	1088.80	1096.92
			W	B2F43-1624-TTNPW R	1067.42	1075.54	1118.60	1126.72
		30"(762mm)	N	B2F43-1630-TTNPN R	1128.42	1138.50	1190.14	1200.22
			7,8,9	B2F43-1630-TTNP R	1155.50	1165.58	1217.22	1227.30
			W	B2F43-1630-TTNPW R	1185.30	1195.38	1247.02	1257.10
		36"(914mm)	N	B2F43-1636-TTNPN R	1226.00	1238.04	1295.40	1307.44
			7,8,9	B2F43-1636-TTNP R	1253.08	1265.12	1322.48	1334.52
			W	B2F43-1636-TTNPW R	1282.88	1294.92	1352.28	1364.32

Upper Storage

Stack-On Bookcase - for 2H Lower Storage

Open

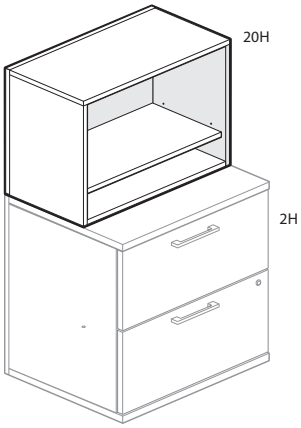

B2N20-TNN

Features

- Includes thermally fused laminate (TFL) case, shelf and proud back.
- Shelf quantities:
  –20”(508mm), 28”(711mm) and 36”(914mm)H include one adjustable shelf.
- Shelves adjust in 1.25”(32mm) increments.

Specification Tips

- Designed for use on 2H Lower Storage with 1.18”(30mm) thick Modular Storage Top or Common Top.
- Depth of Stack-On Bookcase does not need to match depth of lower storage.
- TFL Accessory Shelf may be used on 28”(711mm)H and 36”(914mm)H units; separately specified.
- Stack-On storage units are height specific for use with either 1.5H or 2H lower storage platforms and are not anchored to the building wall. Specify accordingly.
- Stack-On storage must be attached to a modular storage top or a common top and does not require field drilling; may not be installed on an unfinished lower storage top.
- Stack-On storage must be same width as modular lower storage or must match width of one unit within a preconfigured credenza and be attached to that unit.

To Order, Specify:

1) Product number.
2) TFL color.

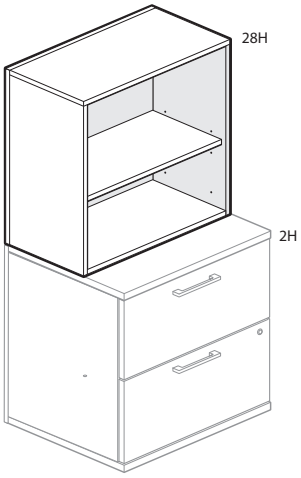

B2N28-TNN

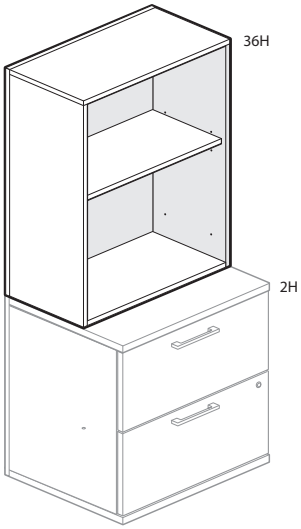

B2N36-TNN

Class BH – Open Market

Height	Depth	Width	Number	TFL A	TFL B
20”(508mm)	16”(406mm)	18”(457mm)	B2N20-1618-TNNPNNN	$453.96	$468.86
		24”(610mm)	B2N20-1624-TNNPNNN	506.81	525.41
		30”(762mm)	B2N20-1630-TNNPNNN	555.59	577.61
		36”(914mm)	B2N20-1636-TNNPNNN	592.18	616.76
28”(711mm)	16”(406mm)	18”(457mm)	B2N28-1618-TNNPNNN	$604.69	$638.95
		24”(610mm)	B2N28-1624-TNNPNNN	673.76	717.97
		30”(762mm)	B2N28-1630-TNNPNNN	742.83	796.99
		36”(914mm)	B2N28-1636-TNNPNNN	791.59	852.57
36”(914mm)	16”(406mm)	18”(457mm)	B2N36-1618-TNNPNNN	$ 650.61	$ 687.73
		24”(610mm)	B2N36-1624-TNNPNNN	723.75	771.10
		30”(762mm)	B2N36-1630-TNNPNNN	796.89	854.47
		36”(914mm)	B2N36-1636-TNNPNNN	853.79	918.75

Upper Storage

Stack-On Storage Cabinet - for 2H Lower Storage

Singled Hinged Door

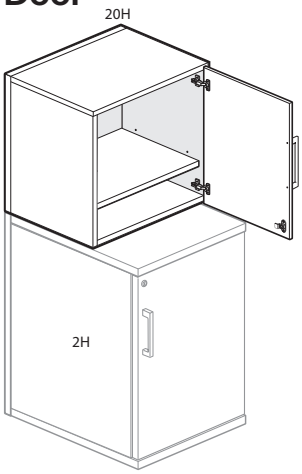

B2F20-TT

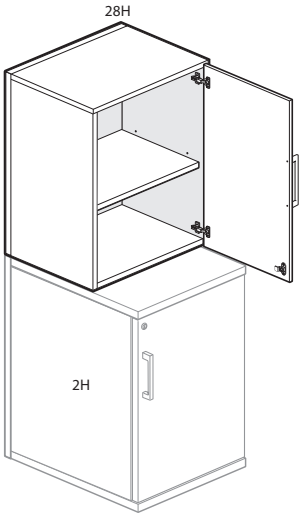

B2F28-TT

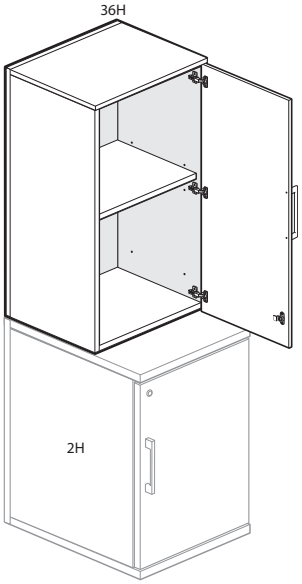

B2F36-TT

Class BH – Open Market

Features

- Includes thermally fused laminate (TFL) storage cabinet with shelf and left or right hand door with concealed hinges.
- Optional door pull options include Crescent, Linear, Classic, and Wing. Touch latch (no pull) option also available.
  –Crescent, Linear and Classic pulls are brushed nickel finish.
  –Wing pull available as specifiable trim color.
- Shelf quantities:
  –20”(508mm), 28”(711mm) and 36”(914mm)H include one adjustable shelf.
- Shelves adjust in 1.25”(32mm) increments.
- Available locking or non-locking.
- Lock plug available in black or chrome.
- Not for use with digital locks.
- For lock options, refer to Lock Program section of the Accessories Price List.

Specification Tips

- Designed for use on 2H Lower Storage with 1.18”(30mm) thick Modular Storage or Common Top.
- Depth of Stack-On Bookcase does not need to match depth of lower storage.
- TFL Accessory Shelf may be used with 28”(711mm)H and 36”(914mm)H cabinet; separately specified.
- Stack-On storage units are height specific for use with either 1.5H or 2H lower storage platforms and are not anchored to the building wall. Specify accordingly.
- Stack-On storage must be attached to a modular storage top or a common top and does not require field drilling; may not be installed on an unfinished lower storage top.
- Stack-On storage must be same width as modular lower storage or must match width of one unit within a preconfigured credenza and be attached to that unit.

To Order, Specify:

1) Product number, including:

❶ **Handedness Option:**
- **R** Right Hand
- **L** Left Hand

❷ **Pull Option:** (see side bar)

❸ **Lock Option:**
- **N** No Lock
- **Y** Lock (add **$43.46** list)

2) TFL color for case/shelves.
3) TFL color for front.
4) Trim color for Wing pull (if applicable).
5) Lock plug color (if applicable).

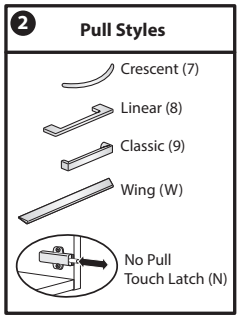

Height	Depth	Width	Pull	Number ❶ ❷	Case TFL A Front TFL A	Case TFL A Front TFL B	Case TFL B Front TFL A	Case TFL B Front TFL B
20”(508mm)	16”(406mm)	18”(457mm)	N	B2F20-1618-TT PN R	$508.20	$ 511.00	$ 523.10	$525.90
			7,8,9	B2F20-1618-TT P R	514.97	517.77	529.87	532.67
			W	B2F20-1618-TT PW R	529.87	532.67	544.77	547.57
28”(711mm)	16”(406mm)	18”(457mm)	N	B2F28-1618-TT PN R	$605.64	$609.56	$639.90	$643.82
			7,8,9	B2F28-1618-TT P R	612.41	616.33	646.67	650.59
			W	B2F28-1618-TT PW R	627.31	631.23	661.57	665.49
36”(914mm)	16”(406mm)	18”(457mm)	N	B2F36-1618-TT PN R	$662.56	$667.60	$699.68	$704.72
			7,8,9	B2F36-1618-TT P R	669.33	674.37	706.45	711.49
			W	B2F36-1618-TT PW R	684.23	689.27	721.35	726.39

Upper Storage

Stack-On Storage Cabinet - for 2H Lower Storage

Double Hinged Door

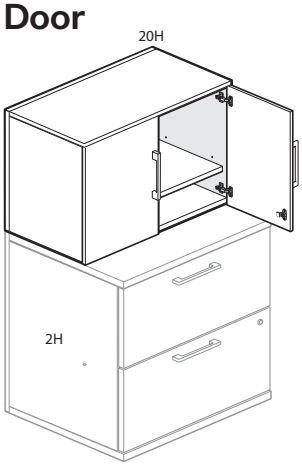

B2F20-TTN

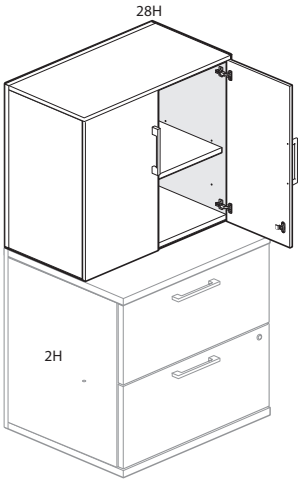

B2F28-TTN

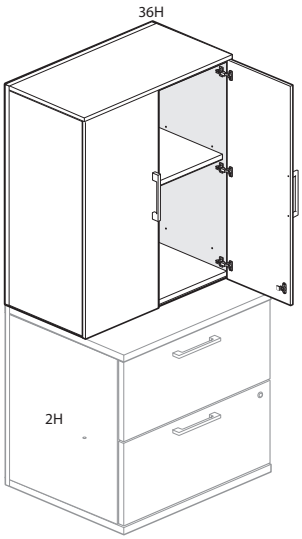

B2F36-TTN

Class BH – Open Market

Features

- Includes thermally fused laminate (TFL) storage cabinet with shelf and double hinged doors with concealed hinges.
- Optional door pull options include Crescent, Linear, Classic, and Wing. Touch latch (no pull) option also available. Wing pull will be on right hand door only.
  –Crescent, Linear and Classic pulls are brushed nickel finish.
  –Wing pull available as specifiable trim color.
- Shelf quantities:
  –20"(508mm), 28"(711mm) and 36"(914mm)H include one adjustable shelf.
- Shelves adjust in 1.25"(32mm) increments.
- Available locking or non-locking.
- Lock plug available in black or chrome.
- Not for use with digital locks.
- For lock options, refer to Lock Program section of the Accessories Price List.

Specification Tips

- Designed for use on 2H Lower Storage with 1.18"(30mm) thick Modular Storage Top or Common Top.
- Depth of Stack-On Bookcase does not need to match depth of lower storage.
- TFL Accessory Shelf may be used with 28"(711mm)H and 36"(914mm)H cabinet; separately specified.
- Stack-On storage units are height specific for use with either 1.5H or 2H lower storage platforms and are not anchored to the building wall. Specify accordingly.
- Stack-On storage must be attached to a modular storage top or a common top and does not require field drilling; may not be installed on an unfinished lower storage top.
- Stack-On storage must be same width as modular lower storage or must match width of one unit within a preconfigured credenza and be attached to that unit.

To Order, Specify:

1) Product number, including:
   ❶ **Pull Option:** (see side bar)
   ❷ **Lock Option:**
   - **N** No Lock
   - **Y** Lock (add **$43.46** list)
2) TFL color for case/shelves.
3) TFL color for front.
4) Trim color for Wing pull (if applicable).
5) Lock plug color (if applicable).

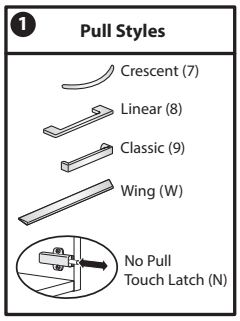

Height	Depth	Width	Pull	Number ❶❷		Case TFL A Front TFL A	Case TFL A Front TFL B	Case TFL B Front TFL A	Case TFL B Front TFL B
20"(508mm)	16"(406mm)	24"(610mm)	N	B2F20-1624-TTNPN	R	$ 639.00	$ 642.92	$ 657.60	$ 661.52
			7,8,9	B2F20-1624-TTNP	R	666.08	670.00	684.68	688.60
			W	B2F20-1624-TTNPW	R	695.88	699.80	714.48	718.40
		30"(762mm)	N	B2F20-1630-TTNPN	R	699.99	704.75	722.01	726.77
			7,8,9	B2F20-1630-TTNP	R	727.07	731.83	749.09	753.85
			W	B2F20-1630-TTNPW	R	756.87	761.63	778.89	783.65
		36"(914mm)	N	B2F20-1636-TTNPN	R	748.79	754.39	773.37	778.97
			7,8,9	B2F20-1636-TTNP	R	775.87	781.47	800.45	806.05
			W	B2F20-1636-TTNPW	R	805.67	811.27	830.25	835.85
28"(711mm)	16"(406mm)	24"(610mm)	N	B2F28-1624-TTNPN	R	$ 781.39	$ 786.71	$ 825.60	$ 830.92
			7,8,9	B2F28-1624-TTNP	R	808.47	813.79	852.68	858.00
			W	B2F28-1624-TTNPW	R	838.27	843.59	882.48	887.80
		30"(762mm)	N	B2F28-1630-TTNPN	R	870.81	877.53	924.97	931.69
			7,8,9	B2F28-1630-TTNP	R	897.89	904.61	952.05	958.77
			W	B2F28-1630-TTNPW	R	927.69	934.41	981.85	988.57
		36"(914mm)	N	B2F28-1636-TTNPN	R	935.85	943.69	996.83	1004.67
			7,8,9	B2F28-1636-TTNP	R	962.93	970.77	1023.91	1031.75
			W	B2F28-1636-TTNPW	R	992.73	1000.57	1053.71	1061.55
36"(914mm)	16"(406mm)	24"(610mm)	N	B2F36-1624-TTNPN	R	$ 871.12	$ 877.84	$ 918.47	$ 925.19
			7,8,9	B2F36-1624-TTNP	R	898.20	904.92	945.55	952.27
			W	B2F36-1624-TTNPW	R	928.00	934.72	975.35	982.07
		30"(762mm)	N	B2F36-1630-TTNPN	R	968.68	977.08	1026.26	1034.66
			7,8,9	B2F36-1630-TTNP	R	995.76	1004.16	1053.34	1061.74
			W	B2F36-1630-TTNPW	R	1025.56	1033.96	1083.14	1091.54
		36"(914mm)	N	B2F36-1636-TTNPN	R	1050.00	1060.08	1114.96	1125.04
			7,8,9	B2F36-1636-TTNP	R	1077.08	1087.16	1142.04	1152.12
			W	B2F36-1636-TTNPW	R	1106.88	1116.96	1171.84	1181.92

Upper Storage

Overhead Storage Unit

Catalog Logic

B2 O H P - 16 24 - T TN N 7 Y R

Product Line
- (B2) Be_Hold Be

Product Type
- (O) Overhead Storage Unit

Overhead Storage Unit Type
- (H) Hinged Door - Single Sided
- (L) Sliding Door - Single Sided
- (M) Sliding Door - Dual Sided
- (S) Open - Single Sided
- (T) Open - Dual Sided

Mounting Style
- (P) Panel Mount
- (S) Stanchion Mount
- (T) Top Trim Mount

Height
- 16”

Width
- 24”
- 30”
- 36”
- 42”
- 48”
- 54”
- 60”
- 66”
- 72”

Case/Back Finish Type
- (T) Thermally Fused Laminate - TFL

Front Finish Type
- (NN) No Front
- (TN) Thermally Fused Laminate - TFL

Handedness
- (L) Left Hand
- (R) Right Hand
- (N) No Hand

Pull
- (7) Crescent
- (8) Linear
- (9) Classic
- (W) Wing
- (S) Sliding Door
- (N) No Pull

Lock Option
- (Y) Locking
- (N) No Lock

Close Type
- (R) Regular Close
- (N) No Close

Upper Storage

Overhead Storage Unit

Open — Single Sided

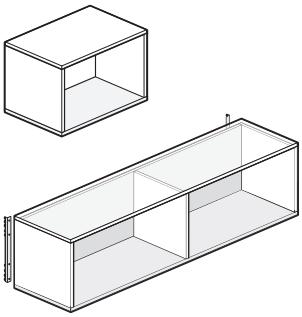

B2OS-TNN
Class BH – Open Market

Features

- Includes one fully thermally fused laminate (TFL) case.
- Available for Panel, Stanchion or Top Trim mounted applications.
  –Stanchions and top mount brackets ordered separately.
  –Panel mounted OSU will ship with mounting brackets.
- 24"(610mm)W - 36"(914mm)W units will be completely open.
- 42"(1067mm)W - 72"(1829mm)W units will have one centered TFL divider.

Specification Tips

- Stanchion mounted and Top Trim mounted OSU have inset back of 1.5"(38mm) and are designed to accommodate a separately specified reference ledge, tackboard or slat rail.

Stanchion Mounted Guidelines:

- Requires separately specified application specific Stanchions/Brackets.
- Mounts on double-sided Intuity benching and desking applications, Adaptable Worksurfaces in Compose panel applications, Compose 26"(660mm)H Panel, Compose Connections, Compose Beam, and Be_Hold Be 2H lower storage.
- Designed to be mounted parallel to the application.
- OSU support:
  –Intuity requires stanchions, an application specific support bracket and the accessory rail mounting.
  –26"(660mm)H Panel, Compose Connections and Compose Beam require stanchions and a support bracket for on and off modular applications use appropriate components.
- Access hatch on Intuity will clear OSU.
- When OSU are in a side-by-side application, order the next width smaller than the width of the worksurface.

Panel Mounted Guidelines:

- For use on Compose panels only.
- To be installed in Compose panel connector slots on same size panel or on a maximum of two panel frames that equal the width of the OSU.
- Cannot be used on top of slat tile.

Top Trim Mounted Guidelines:

- Can be off-modular mounted on separately specified Compose aluminum top trim (UZCC).
- OSU can be mounted over steel trim using Panel Top Mount Brackets (QZBT).
- Refer to the Specification Guide for mounting application guidelines per product line.

To Order, Specify:

1) Product number, including:

❶ **Mounting Option:**

- **P** Panel Mounted (add **$26.33** list)
- **S** Stanchion Mounted
- **T** Top Trim Mounted

2) TFL color.

Height	Depth	Width	Number ❶	TFL A	B
16"(406mm)	16"(406mm)	24"(610mm)	B2OS ■ -1624-TNNNNNN	$ 519.91	$ 544.56
		30"(762mm)	B2OS ■ -1630-TNNNNNN	577.70	609.01
		36"(914mm)	B2OS ■ -1636-TNNNNNN	630.23	666.72
		42"(1067mm)	B2OS ■ -1642-TNNNNNN	716.10	759.25
		48"(1219mm)	B2OS ■ -1648-TNNNNNN	773.89	823.70
		54"(1372mm)	B2OS ■ -1654-TNNNNNN	826.42	881.41
		60"(1524mm)	B2OS ■ -1660-TNNNNNN	884.21	945.86
		66"(1676mm)	B2OS ■ -1666-TNNNNNN	942.00	1010.31
		72"(1829mm)	B2OS ■ -1672-TNNNNNN	994.53	1068.02

Upper Storage

Overhead Storage Unit

Open — Dual Sided

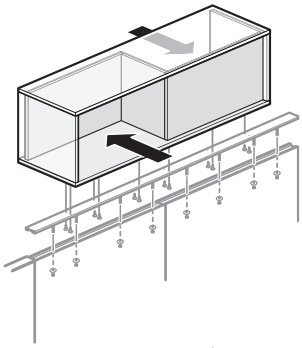

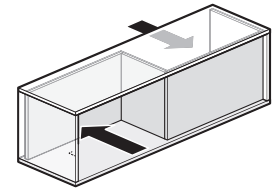

B2OT-TNN
Class BH – Open Market

Features

- Includes one fully thermally fused laminate (TFL) case.
- Dual sided unit will be half of unit width on each side.
- Available for Stanchion or Top mounted Compose applications. Stanchions and Top Mount Brackets ordered separately.

Specification Tips

- Stanchion mounted and Top Trim mounted OSU have inset back of 1.5"(38mm) and are designed to accommodate a separately specified reference ledge, tackboard or slat rail.
- Handedness is determined by the location of the open side when facing the unit.

Stanchion Mounted Guidelines:

- Requires separately specified application specific Stanchions/Brackets.
- Mounts on double-sided Intuity benching and desking applications, Adaptable Worksurfaces in Compose panel applications, Compose 26"(660mm)H Panel, Compose Connections, Compose Beam, and Be_Hold Be 2H lower storage.
- Designed to be mounted parallel to the application.
- OSU cannot be flush mounted to a worksurface; must use stanchion.
- OSU support:
  - –Intuity requires stanchions, an application specific support bracket and the accessory rail mounting.
  - –26"(660mm)H Panel, Compose Connections and Compose Beam require stanchions and a support bracket for on and off modular applications use appropriate components.
- Access hatch on Intuity will clear OSU.
- When OSU are in a side-by-side application, order the next width smaller than the width of the worksurface.

Top Trim Mounted Guidelines:

- Can be off-modular mounted on separately specified Compose aluminum top trim (UZCC).
- OSU can be mounted over steel trim using Panel Top Mount Brackets (QZBT).
- Refer to the Specification Guide for mounting application guidelines per product line.

To Order, Specify:

1) Product number, including:

❶ **Mounting Option:**
- **S** Stanchion Mounted
- **T** Top Trim Mounted

❷ **Handedness:**
- **L** Left Hand
- **R** Right Hand

2) TFL color.

Height	Depth	Width	Number ❶	❷	TFL A	B
16"(406mm)	16"(406mm)	36"(914mm)	B2OT	-1636-TNN	NNN	$630.23	$ 666.72
		42"(1067mm)	B2OT	-1642-TNN	NNN	716.10	759.25
		48"(1219mm)	B2OT	-1648-TNN	NNN	773.89	823.70
		54"(1372mm)	B2OT	-1654-TNN	NNN	826.42	881.41
		60"(1524mm)	B2OT	-1660-TNN	NNN	884.21	945.86
		66"(1676mm)	B2OT	-1666-TNN	NNN	942.00	1010.31
		72"(1829mm)	B2OT	-1672-TNN	NNN	994.53	1068.02

Upper Storage

Overhead Storage Unit

Sliding Door — Single Sided

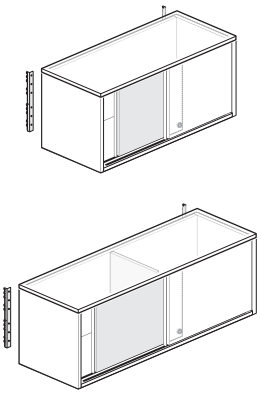

B2OL-TTN

Class BH – Open Market

Features

- Includes one fully thermally fused laminate (TFL) case and sliding doors.
- Available for Panel, Stanchion or Top Trim mounted applications.
  –Stanchions and Top Mount Brackets ordered separately.
  –Panel mounted OSU will ship with mounting brackets.
- Handedness determined by inset door.
- Pull standard in metallic silver.
- 24"(610mm)W - 36"(914mm)W units will be completely open.
- 42"(1067mm)W - 72"(1829mm)W units will have one centered TFL divider.
- Available locking or non-locking.
- Lock plug available in chrome only.
- Not for use with digital locks.
- For lock options, refer to Lock Programs section of the Accessories Price List.

Specification Tips

- Stanchion mounted and Top Trim mounted OSU have inset back of 1.5"(38mm) and are designed to accommodate a separately specified tackboard or slat rail.
- Units cannot be retrofitted with different door style; i.e. sliding doors cannot be changed to hinged doors.

Stanchion Mounted Guidelines:

- Requires separately specified application specific Stanchions/Brackets.
- Mounts on double-sided Intuity benching and desking applications, Adaptable Worksurfaces in Compose panel applications, Compose 26"(660mm)H Panel, Compose Connections, Compose Beam, and Be_Hold Be 2H lower storage.
- Designed to be mounted parallel to the application.
- OSU cannot be flush mounted to a worksurface; must use stanchion.
- OSU support:
  –Intuity requires stanchions, an application specific support bracket and the accessory rail mounting.
  –26"(660mm)H Panel, Compose Connections and Compose Beam require stanchions and a support bracket for on and off modular applications use appropriate components.
- Access hatch on Intuity will clear OSU.
- When OSU are in a side-by-side application, order the next width smaller than the width of the worksurface.

Panel Mounted Guidelines:

- For use on Compose panels only.
- To be installed in Compose panel connector slots on same size panel or on a maximum of two panel frames that equal the width of the OSU.
- Cannot be used on top of slat tile.

Top Trim Mounted Guidelines:

- Can be off-modular mounted on separately specified Compose aluminum top trim (UZCC).
- OSU can be mounted over steel trim using Panel Top Mount Brackets (QZBT).
- Refer to the Specification Guide for mounting application guidelines per product line.

To Order, Specify:

1) Product number, including:

❶ **Mounting Option:**
- **P** Panel Mounted (add **$26.33** list)
- **S** Stanchion Mounted
- **T** Top Trim Mounted

❷ **Handedness:**
- **L** Left Hand
- **R** Right Hand

❸ **Lock Option:**
- **N** Non-locking
- **Y** Locking (add **$43.46** list)

2) TFL case color.
3) TFL front color.
4) Trim color for pull (TR-LE Metallic Silver only).
5) Trim color for lock plug (LR-BP Chrome only).

Height	Depth	Width	Number ❶	❷ ❸	Case TFL A Front TFL A	Case TFL A Front TFL B	Case TFL B Front TFL A	Case TFL B Front TFL B
16"(406mm)	16"(406mm)	36"(914mm)	B2OL	-1636-TTN S R	$ 971.16	$ 979.96	$1007.65	$ 1016.45
		42"(1067mm)	B2OL	-1642-TTN S R	984.52	994.97	1027.67	1038.12
		48"(1219mm)	B2OL	-1648-TTN S R	1089.83	1101.93	1139.64	1151.74
		54"(1372mm)	B2OL	-1654-TTN S R	1121.14	1134.34	1176.13	1189.33
		60"(1524mm)	B2OL	-1660-TTN S R	1194.71	1209.56	1256.36	1271.21
		66"(1676mm)	B2OL	-1666-TTN S R	1268.28	1284.78	1336.59	1353.09
		72"(1829mm)	B2OL	-1672-TTN S R	1331.33	1348.93	1404.82	1422.42

Upper Storage

Overhead Storage Unit

Sliding Door — Dual Sided

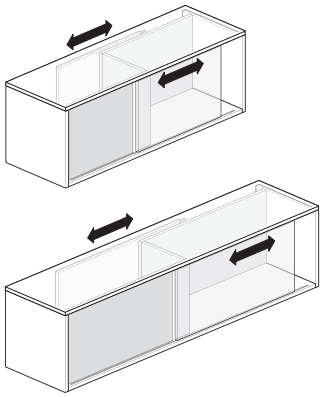

B2OM-TTN
Class BH – Open Market

Features

- Includes one fully thermally fused laminate (TFL) case and sliding doors.
- Dual sided unit will be half of unit width on each side.
- Available for Stanchion or Top Trim mounted applications.
- Unit will have one sliding door per side.
- Pull standard in metallic silver.
- Available as non-locking only.

Specification Tips

- Stanchion mounted and Top Trim mounted OSU have inset back of 1.5"(38mm) and are designed to accommodate a separately specified tackboard or slat rail.
- Units cannot be retrofitted with different door style; i.e. sliding doors cannot be changed to hinged doors.

Stanchion Mounted Guidelines:

- Requires separately specified application specific Stanchions/Brackets.
- Mounts on double-sided Intuity benching and desking applications, Adaptable Worksurfaces in Compose panel applications, Compose 26"(660mm)H Panel, Compose Connections, Compose Beam, and Be_Hold Be 2H lower storage.
- Designed to be mounted parallel to the application.
- OSU cannot be flush mounted to a worksurface; must use stanchion.
- OSU support:
  - –Intuity requires stanchions, an application specific support bracket and the accessory rail mounting.
  - –26"(660mm)H Panel, Compose Connections and Compose Beam require stanchions and a support bracket for on and off modular applications use appropriate components.
- Access hatch on Intuity will clear OSU.
- When OSU are in a side-by-side application, order the next width smaller than the width of the worksurface.

Top Trim Mounted Guidelines:

- Can be off-modular mounted on separately specified Compose aluminum top trim (UZCC).
- OSU can be mounted over steel trim using Panel Top Mount Brackets (QZBT).
- Refer to the Specification Guide for mounting application guidelines per product line.

To Order, Specify:

1) Product number, including:

❶ **Mounting Option:**
- **S** Stanchion Mounted
- **T** Top Trim Mounted

❷ **Handedness:**
- **L** Left Hand
- **R** Right Hand

2) TFL case color.
3) TFL front color.
4) Trim color for pull (TR-LE Metallic Silver only).

Height	Depth	Width	Number ❶	❷	Case TFL A Front TFL A	Case TFL A Front TFL B	Case TFL B Front TFL A	Case TFL B Front TFL B
16"(406mm)	16"(406mm)	36"(914mm)	B2OM	-1636-TTN SNR	$ 1135.55	$ 1270.75	$ 1172.04	$ 1307.24
		42"(1067mm)	B2OM	-1642-TTN SNR	1252.98	1413.53	1296.13	1456.68
		48"(1219mm)	B2OM	-1648-TTN SNR	1342.33	1528.23	1392.14	1578.04
		54"(1372mm)	B2OM	-1654-TTN SNR	1415.90	1618.70	1470.89	1673.69
		60"(1524mm)	B2OM	-1660-TTN SNR	1505.25	1733.40	1566.90	1795.05
		66"(1676mm)	B2OM	-1666-TTN SNR	1594.60	1848.10	1662.91	1916.41
		72"(1829mm)	B2OM	-1672-TTN SNR	1668.17	1938.57	1741.66	2012.06

Upper Storage

Overhead Storage Unit

Hinged Door — Single Sided

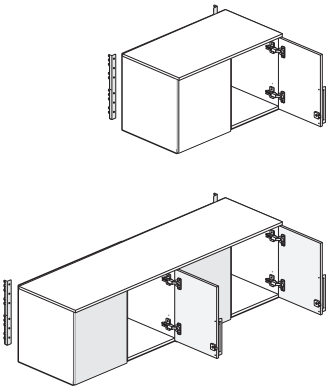

B2OHP-TTN

Class BH – Open Market

Features

- Includes thermally fused laminate (TFL) case with TFL front and mounting brackets.
- Available for Panel mounted application only.
- Optional door pull options include Crescent, Linear, Classic, and Wing. Touch latch (no pull) option also available.
  –Crescent, Linear and Classic pulls are brushed nickel finish.
  –Wing pull available as specifiable trim color. Wing pull will be on right-hand door(s) only.
- 24”(610mm)W - 36”(914mm)W units have two doors with one lock. Interior is one full width open space.
- 42”(1067mm)W - 72”(1829mm)W units have four doors and two locks. Interior has two half width openings separated by a TFL divider. (TFL matches case)
- Available locking or non-locking.
- Lock plug available in black or chrome.
- Not for use with digital locks.
- For lock options, refer to Lock Program section of the Accessories Price List.

Specification Tips

- Units cannot be retrofitted with different door style; i.e. sliding doors cannot be changed to hinged doors.
- For use on Compose panels only.
- To be installed in Compose panel connector slots on same size panel or on a maximum of two panel frames that equal the width of the OSU.
- Cannot be used on top of slat tile.
- Refer to the Specification Guide for mounting application guidelines.

To Order, Specify:

1) Product number, including:

❶ **Pull Option:** (see side bar)

❷ **Lock Option:**

N Non-locking

Y Locking, add:
24”W-36”W units
(add **$43.46** list)
42”W-72”W units
(add **$86.92** list)

2) TFL case color.
3) TFL front color.
4) Pull color (Wing pull only).
5) Lock plug color (if applicable).

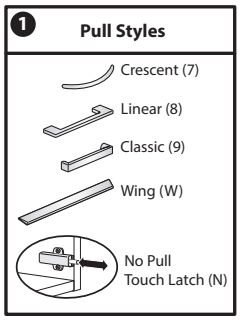

Upper Storage

Overhead Storage Unit

Height	Depth	Width	Pull	Number ❶❷	Case TFL A Front TFL A	Case TFL A Front TFL B	Case TFL B Front TFL A	Case TFL B Front TFL B
16"(406mm)	16"(406mm)	24"(610mm)	N	B2OHP-1624-TTNNN R	$ 660.06	$ 666.11	$ 684.71	$ 690.76
			7,8,9	B2OHP-1624-TTNN R	686.39	692.44	711.04	717.09
			W	B2OHP-1624-TTNNW R	715.35	721.40	740.00	746.05
		30"(762mm)	N	B2OHP-1630-TTNNN R	733.63	741.33	764.94	772.64
			7,8,9	B2OHP-1630-TTNN R	759.96	767.66	791.27	798.97
			W	B2OHP-1630-TTNNW R	788.92	796.62	820.23	827.93
		36"(914mm)	N	B2OHP-1636-TTNNN R	796.68	805.48	833.17	841.97
			7,8,9	B2OHP-1636-TTNN R	823.01	831.81	859.50	868.30
			W	B2OHP-1636-TTNNW R	851.97	860.77	888.46	897.26
		42"(1067mm)	N	B2OHP-1642-TTNNN R	898.33	908.78	941.48	951.93
			7,8,9	B2OHP-1642-TTNN R	964.16	974.61	1007.31	1017.76
			W	B2OHP-1642-TTNNW R	1022.08	1032.53	1065.23	1075.68
		48"(1219mm)	N	B2OHP-1648-TTNNN R	971.90	984.00	1021.71	1033.81
			7,8,9	B2OHP-1648-TTNN R	1037.73	1049.83	1087.54	1099.64
			W	B2OHP-1648-TTNNW R	1095.65	1107.75	1145.46	1157.56
		54"(1372mm)	N	B2OHP-1654-TTNNN R	1034.95	1048.15	1089.94	1103.14
			7,8,9	B2OHP-1654-TTNN R	1100.78	1113.98	1155.77	1168.97
			W	B2OHP-1654-TTNNW R	1158.70	1171.90	1213.69	1226.89
		60"(1524mm)	N	B2OHP-1660-TTNNN R	1108.52	1123.37	1170.17	1185.02
			7,8,9	B2OHP-1660-TTNN R	1174.35	1189.20	1236.00	1250.85
			W	B2OHP-1660-TTNNW R	1232.27	1247.12	1293.92	1308.77
		66"(1676mm)	N	B2OHP-1666-TTNNN R	1182.09	1198.59	1250.40	1266.90
			7,8,9	B2OHP-1666-TTNN R	1247.92	1264.42	1316.23	1332.73
			W	B2OHP-1666-TTNNW R	1305.84	1322.34	1374.15	1390.65
		72"(1829mm)	N	B2OHP-1672-TTNNN R	1245.14	1262.74	1318.63	1336.23
			7,8,9	B2OHP-1672-TTNN R	1310.97	1328.57	1384.46	1402.06
			W	B2OHP-1672-TTNNW R	1368.89	1386.49	1442.38	1459.98

Upper Storage Support

For use with Intuity Benching, Be_Hold and Be_Hold Be

Stanchion

AUSK-Universal
(N) No USB Power
(Worksurface Supported)

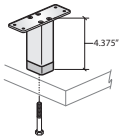

AUSK-Intuity
(U) USB Power

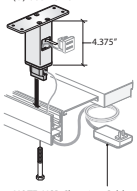

NOTE: USB Charging Cable
Seperatly Specified

AUSK-Intuity
(N) No USB Power

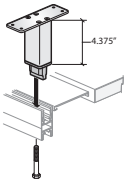

AUSK

Class IN

Features

- Includes one painted stanchion and attachment hardware.
- USB Power option on Intuity Stanchion includes a cutout for USB module.

Specification Tips

- Supports Upper Storage - Overhead Storage Unit - Stanchion Mounted in parallel or perpendicular applications.
- Available for use with Intuity Desking, Be_Hold Storage and 2H Be_Hold Be.
- All Stanchions **not for use with Off-Modular Rail for Storage.**
- Intuity Stanchion Power Cutout Guidelines:
  –USB power available with Intuity Stanchion only.
  –For USB power, specify USB module and cables separately. (Retrofit USB Charging Cable EUDX-U000-B OR EUDX-U000-W.)
- See Specification Guide for specific application details and number of stanchions needed.

To Order, Specify:

1) Product number, including:

❶ **Power Cutout Option (Intuity only):**

N No Power

U USB Power (add **$34.20** list)

2) Trim color.

Height	Description	Number ❶	Trim A	Trim B
4.375"(111mm)	Intuity Benching	AUSK-0400-B	$81.71	$85.13
	Universal (29"(737mm)H WS and 2H Be_Hold Be Storage)	AUSK-0400-UN	81.71	85.13

Upper Storage Support

For use with Intuity Benching

Worksurface to Storage Bracket – Intuity with Access Hatch Mid-Mod Mount

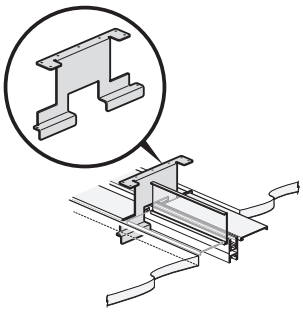

ZBBM-PSN
Class IN

Feature
- One painted steel bracket with mounting hardware.

Specification Tips
- Required when Be_Hold Be Overhead Storage Unit is centered on an Intuity starter or add on kit without access hatches.
- Bracket mounts between the split in the access hatch.
- Bracket is centered on Be_Hold Be Overhead Storage Unit.
- Used in combination with required Intuity Stanchions and Accessory Rail Mounting Bracket Kit.
- Bracket is **not for use with Off-Modular Rail for Storage.**
- One bracket is required for each Be_Hold Be Overhead Storage Unit.
- See Specification Guide for planning information.

To Order, Specify:
1) Product number.
2) Trim color.

Number	Trim A	Trim B
ZBBM-0410-PSN	$111.20	$113.06

Worksurface to Storage Bracket – Intuity without Access Hatch

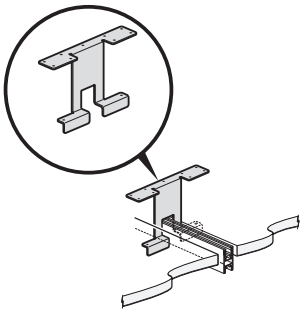

ZBBB-PCN
Class IN

Feature
- One painted steel bracket with mounting hardware.

Specification Tips
- Required when Be_Hold Be Overhead Storage Unit is centered on an Intuity starter or add on kit with access hatches.
- Bracket mounts between the split in the access hatch.
- Bracket is centered on Be_Hold Be Overhead Storage Unit.
- Used in combination with required Intuity Stanchions and Accessory Rail Mounting Bracket Kit.
- Bracket is **not for use with Off-Modular Rail for Storage.**
- One bracket is required for each Be_Hold Be Overhead Storage Unit.
- See Specification Guide for planning information.

To Order, Specify:
1) Product number.
2) Trim color.

Number	Trim A	Trim B
ZBBB-0410-PCN	$111.20	$113.06

Upper Storage Support

For use with Compose Panels — Off-Modular Top Trim Mounting

Off-Modular Top Trim Mounting 24”(610mm)-120”(3048mm) for Compose

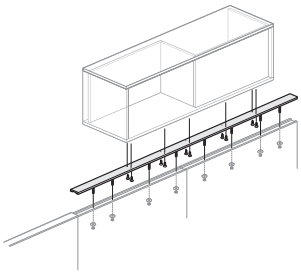

UZCC
Class BC

Feature

- Includes Full Profile Aluminum Off Modular top trim and attachment hardware.

Specification Tips

- Designed to be used in Full Profile Aluminum top trim applications only.
- Recommended panel height is 42”(1067mm) to 50”(1270mm).
- Not recommended for use with 26”(660mm)H Compose Panel, Compose Connections or Compose Beam.
- Use to center mount Overhead Storage Unit to modular or off modular application on a panel.

To Order, Specify:

1) Product number.
2) Trim color.

Number	Trim A	Trim B
UZCC-0024-A	$ 203.75	$ 206.32
UZCC-0030-A	220.19	222.76
UZCC-0036-A	236.63	239.20
UZCC-0042-A	253.07	255.64
UZCC-0048-A	269.51	272.08
UZCC-0051-A	277.73	280.30
UZCC-0054-A	285.95	288.52
UZCC-0060-A	302.39	304.96
UZCC-0063-A	350.01	352.58
UZCC-0066-A	358.23	360.80
UZCC-0072-A	374.67	377.24
UZCC-0075-A	418.86	421.43
UZCC-0078-A	427.08	429.65
UZCC-0084-A	443.52	446.09
UZCC-0090-A	459.96	462.53
UZCC-0096-A	476.40	478.97
UZCC-0102-A	492.84	495.41
UZCC-0108-A	509.28	511.85
UZCC-0114-A	525.72	528.29
UZCC-0120-A	542.16	544.73

Upper Storage Support

For use with Compose 26"(660mm)H Panel, Compose Connections and Compose Beam — Centered Single Panel Mount

Stanchion for use with Standard Aluminum Top Trim

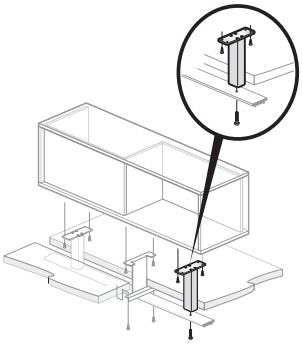

ZZBP-PAN
Class IN

Feature
- Includes one painted stanchion and attachment hardware.

Specification Tips
- Designed to be used with Compose 26"(660mm)H Panel, Compose Connections and Compose Beam with standard aluminum top trim. 16"(406mm)H Upper Storage - Stanchion Mounted install centered on a single panel.
- Not to be used with work rail top trim.
- No USB power available.
- Stanchion is **not for use with Off-Modular Rail for Storage.**
- For use with Be_Hold Be stanchion mounted Sliding Door and Open Overhead Storage Units.
- Not for use with Be_Hold Be Hinged Door Overhead Storage Unit.
- See Specification Guide for specific application details and number of stanchions needed.

To Order, Specify:
1) Product number.
2) Trim color.

Height	Number	Trim A	Trim B
8"(203mm)	ZZBP-0800-PAN	$250.20	$268.68

Stanchion for use with Work Rail Top Trim

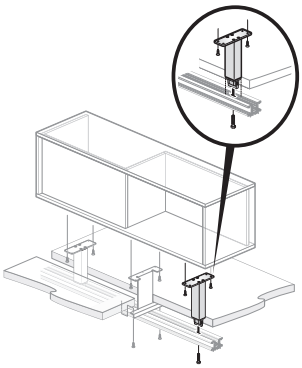

ZZBP-PGN
Class IN

Feature
- Includes one painted stanchion and attachment hardware.

Specification Tips
- Designed to be used with Compose 26"(660mm)H Panel, Compose Connections and Compose Beam with work rail top trim. 16"(406mm)H Upper Storage - Stanchion Mounted install centered on a single panel.
- Not to be used with standard aluminum top trim.
- No USB power available.
- Stanchion is **not for use with Off-Modular Rail for Storage.**
- For use with Be_Hold Be stanchion mounted Sliding Door and Open Overhead Storage Units.
- Not for use with Be_Hold Be Hinged Door Overhead Storage Unit.
- See Specification Guide for specific application details and number of stanchions needed.

To Order, Specify:
1) Product number.
2) Trim color.

Height	Number	Trim A	Trim B
7"(178mm)	ZZBP-0700-PGN	$296.41	$313.35

Upper Storage Support

For use with Compose and UniGroup Too Panels — Center Mount Overhead Storage Unit

Worksurface to Storage Bracket – Compose 26”(660mm)H Panel, Compose Connections and Compose Beam Mount

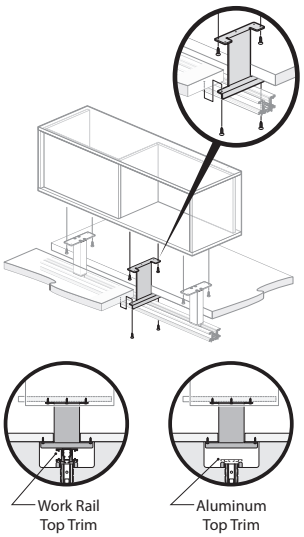

ZVBM-PWN
Class IN

Feature
- Includes one painted bracket and mounting hardware.

Specification Tips
- Designed to be used with Compose 26”(660mm)H Panel, Compose Connections and Compose Beam with work rail top trim or standard aluminum top trim. 16”(406mm)H Upper Storage - Stanchion Mounted install centered on a single panel.
- Requires an attached worksurface on both sides of panel.
- Stanchion is **not for use with Off-Modular Rail for Storage.**
- For use with Be_Hold Be stanchion mounted Sliding Door and Open Overhead Storage Units.
- Not for use with Be_Hold Be Hinged Door Overhead Storage Unit.
- One bracket is required for each 16”(406mm)H Upper Storage - Unit - Stanchion Mounted.
- See Specification Guide for specific application details and number of stanchions needed.

To Order, Specify:
1) Product number.
2) Trim color.

Number	Trim A	Trim B
ZVBM-0603-PWN	$111.20	$113.06

Top Mount Bracket – Compose and UniGroup Too Panels

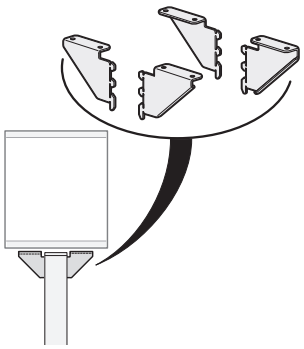

QZBT-0000
Class IN

Features
- Includes two LH and two RH brackets to center mount Be_Hold Be OSU.
- Brackets install in panel connector slots on a single panel frame the same width as the OSU or span a maximum of two panel frames equal to the width of the OSU; OSU spanning panel application requires a quantity of one bracket.

Specification Tips
- Order appropriate Top mount bracket for panel trim specified.
- For use with Be_Hold Be OSU Top Trim Mounting Option (T) for open and sliding door overhead storage units; not for use with hinged door OSU.
- Recommended for use on 50”(1270mm)H and 58”(1473mm)H Compose Full Panel Frames and 48”(1219mm)H and 56”(1422mm)H UniGroup Too panels.
- Not for use on Compose 26”(660mm)H full panel frames, glass panels, glass stack frames, Compose Connections or Compose Beam.
- Refer to Compose or UniGroup Too Specification Guide for support and load application guidelines.

To Order, Specify:
1) Product number.
2) Trim color.

Description	Number	Trim A	Trim B
Compose Steel Trim			
	QZBT-0000-PPH	$136.23	$154.14
Compose Aluminum Trim			
	QZBT-0000-PPA	$136.23	$154.14
UniGroup Too			
	QEBT-0000-PP	$136.23	$154.14

Upper Storage Support

For use with Compose 26"(660mm)H Panel, Compose Connections and Compose Beam — Off-Modular Rail Mounting

Off-Modular Rail for mounting Compose to Be_Hold Upper Storage – Stanchion Mounted

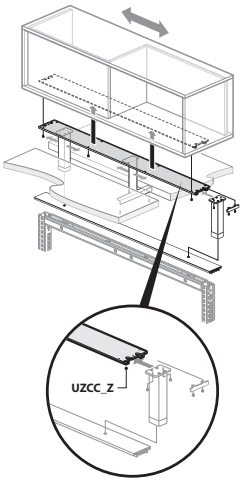

UZCC-AAZ
Class BC

Feature
- Includes off modular rail and attachment hardware.

Specification Tips
- Allows stanchion placement flexibility with Compose 26"(660mm)H Panel, Compose Connections and Compose Beam panel applications.
- One work rail to one component.
- Work rail and component must be sized the same.
- Requires separately specified Off-Modular Stanchions (ZZBP-0800-PAZ or ZZBP-0700-PGZ), Worksurface to Storage Bracket – For use with Off-Modular Rail (ZVBM-0603-PZN), 16"(406mm)H Upper Storage - Stanchion Mounted to complete the application.
- For use with Be_Hold Be stanchion mounted Sliding Door and Open Overhead Storage Units.
- Not for use with Be_Hold Be Hinged Door Overhead Storage Unit.
- See Specification Guide for specific application details and number of stanchions needed.

To Order, Specify:
1) Product number.
2) Trim color.

Number	Trim A	Trim B
UZCC-0024-AAZ	$1070.94	$ 1075.88
UZCC-0030-AAZ	1113.72	1120.76
UZCC-0036-AAZ	1156.50	1165.64
UZCC-0042-AAZ	1199.28	1210.52
UZCC-0048-AAZ	1242.06	1255.40
UZCC-0054-AAZ	1284.84	1300.28
UZCC-0060-AAZ	1327.62	1345.16
UZCC-0066-AAZ	1370.40	1390.04
UZCC-0072-AAZ	1413.18	1434.92

End Cap, Off-Modular Rail – For use with Be_Hold Upper Storage – Stanchion Mounted

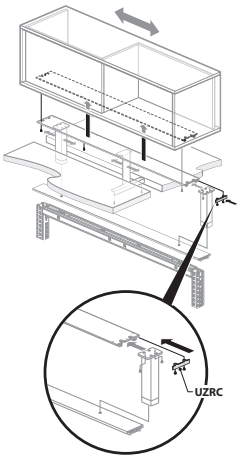

UZRC-0000
Class BC

Feature
- Includes two end caps and hardware

Specification Tip
- For use when the ends of the Off-Modular Rail are exposed.

To Order, Specify:
1) Product number.
2) Trim surface color.

Number	Trim A	Trim B
UZRC-0000	$156.62	$163.64

Upper Storage Support

For use with Compose 26"(660mm)H Panel, Compose Connections and Compose Beam — Off-Modular Rail Mounting

Off-Modular Stanchion – For use with Standard Aluminum Top Trim

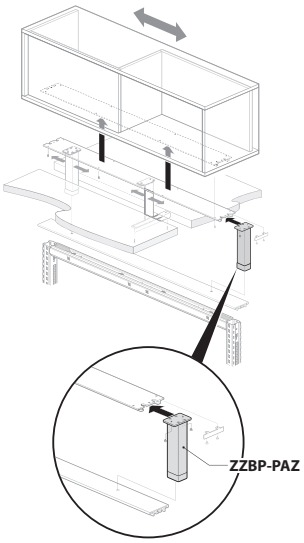

ZZBP-PAZ
Class IN

Feature
- Includes one painted stanchion and attachment hardware.

Specification Tips
- Designed to be used with Compose 26"(660mm)H Panel, Compose Connections and Compose Beam with standard aluminum top trim. 16"(406mm)H Upper Storage - OSU - Stanchion Mounted install on a single or double panel run with a shared top cap, as long as the stanchion doesn't line up with the joint between the two panels.
- This stanchion must always be paired with the Stiffner Bracket for Compose Off-Modular (ZVBM-0603-PZN) and required attached worksurfaces or storage tops for stability.
- Not to be used with work rail top trim.
- No USB power available.
- Requires separately specified Off-Modular Rail (UZCC-00_ _-AAZ), Worksurface to Storage Bracket – For use with Off-Modular Rail, 16"(406mm)H Upper Storage - Stanchion Mounted to complete the application.
- For use with Be_Hold Be stanchion mounted Sliding Door and Open Overhead Storage Units.
- Not for use with Be_Hold Be Hinged Door Overhead Storage Unit.
- See Specification Guide for specific application details and number of stanchions needed.

To Order, Specify:
1) Product number.
2) Trim color.

Height	Number	Trim A	Trim B
8"(203mm)	ZZBP-0800-PAZ	$300.20	$318.68

Off-Modular Stanchion – For use with Work Rail Top Trim

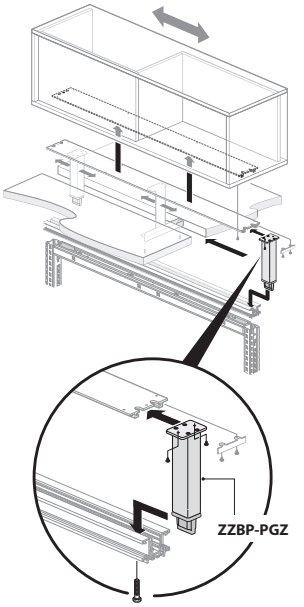

ZZBP-PGZ
Class IN

Feature
- Includes one painted stanchion and attachment hardware.

Specification Tips
- Designed to be used with Compose 26"(660mm)H Panel, Compose Connections and Compose Beam with work rail top trim. 16"(406mm)H Upper Storage - OSU - Stanchion Mounted install on a single or double panel run with a shared top cap as long as the stanchion does not line up with the joint between the two panels.
- This stanchion must always be paired with the Stiffner Bracket for Compose Off-Modular (ZVBM-0603-PZN) and required attached worksurfaces or storage tops for stability.
- Not to be used with standard aluminum top trim.
- No USB power available.
- Requires separately specified Off-Modular Rail (UZCC-00_ _-AAZ), Worksurface to Storage Bracket – For use with Off-Modular Rail, 16"(406mm)H Upper Storage - Stanchion Mounted to complete the application.
- For use with Be_Hold Be stanchion mounted Sliding Door and Open Overhead Storage Units.
- Not for use with Be_Hold Be Hinged Door Overhead Storage Unit.
- See Specification Guide for specific application details and number of stanchions needed.

To Order, Specify:
1) Product number.
2) Trim surface color.

Height	Number	Trim A	Trim B
7"(178mm)	ZZBP-0700-PGZ	$346.41	$363.35

Upper Storage Support

For use with Compose 26”(660mm)H Panel, Compose Connections and Compose Beam — Off-Modular Rail Mounting

Worksurface to Storage Bracket – For use with Off-Modular Rail – Compose 26”(660mm)H Panel, Compose Connections and Compose Beam

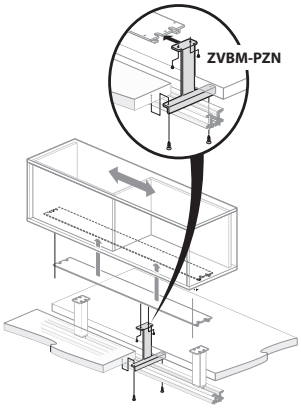

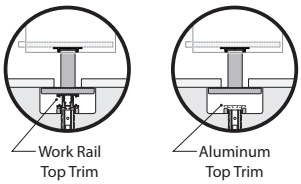

ZVBM-PZN
Class IN

Feature
- Includes one painted bracket and mounting hardware.

Specification Tips
- Designed to be used with Compose 26”(660mm)H Panel, Compose Connections and Compose Beam with work rail top trim or standard aluminum top trim.
- Requires an attached worksurface on both sides of panel.
- Requires separately specified Off-Modular Rail (UZCC-00_ _-AAZ), Off-Modular Stanchions, 16”(406mm)H Upper Storage - Stanchion Mounted to complete the application.
- For use with Be_Hold Be stanchion mounted Sliding Door and Open Overhead Storage Units.
- Not for use with Be_Hold Be Hinged Door Overhead Storage Unit.
- One bracket is required for each 16”(406mm)H Upper Storage - OSU - Stanchion Mounted.
- See Specification Guide for specific application details and number of stanchions needed.

To Order, Specify:

1) Product number.
2) Trim color.

Number	Trim A	Trim B
ZVBM-0603-PZN	$111.20	$113.06

Freestanding Storage

Bookcase

Catalog Logic

B2 B 49 N - 16 36 - T T P N N

Product Line
(B2) Be_Hold Be

Product Type
(B) Bookcase

Height
49″
57″
65″

Height Adjustable Table Option
(N) No HAT Integration

Depth
16″
24″

Width
18″
24″
30″
36″

Case Finish Type
(T) Thermally Fused Laminate - TFL

Shelf Finish Type
(T) Thermally Fused Laminate - TFL

Back
(P) Proud

Trim Plate Cover
(N) No Trim Plate Cover

Power Cutout for HAT
(N) No Power Cutout

Freestanding Storage

Bookcase

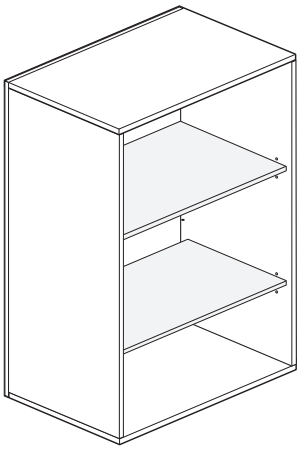

B2B49N-TTPNN

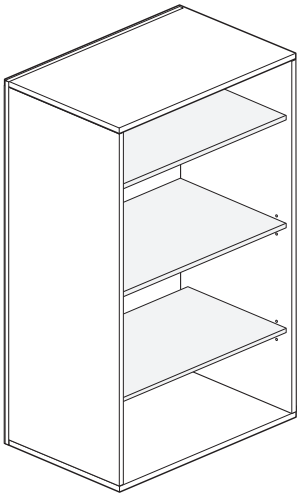

B2B57N-TTPNN

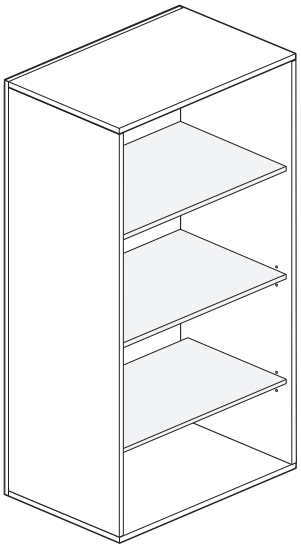

B2B65N-TTPNN
Class BH – Open Market

Features

- Includes one thermally fused laminate (TFL) bookcase with TFL shelves, glides and finished 0.75"(19mm) thick top.
- TFL shelves match case.
- 49"(1245mm)H bookcase has one fixed and one adjustable shelf. 57"(1448mm)H and 65"(1651mm)H bookcases have one fixed and two adjustable shelves.
- Glides provide 1"(25mm) leveling adjustment range.

Specification Tips

- Height adjustable shelves insert into designated mounting locations. For fixed shelf location, refer to Product Details.
- For use with separately specified:
  –Personal Drawer
- NOT for use with:
  –Stack-On Storage
  –Be_Hold Storage legs
- Refer to Specification Guide for product application information.

To Order, Specify:

1) Product number.
2) TFL color.

Freestanding Storage

Bookcase

Height	Depth	Width	Number	TFL A	B
49”(1245mm)	16”(406mm)	18”(457mm)	B2B49N-1618-TTPNN	$ 813.33	$ 839.07
		24”(610mm)	B2B49N-1624-TTPNN	880.85	911.32
		30”(762mm)	B2B49N-1630-TTPNN	948.37	983.57
		36”(914mm)	B2B49N-1636-TTPNN	1003.97	1043.07
	24”(610mm)	18”(457mm)	B2B49N-2418-TTPNN	948.46	983.57
		24”(610mm)	B2B49N-2424-TTPNN	1027.90	1068.57
		30”(762mm)	B2B49N-2430-TTPNN	1107.34	1153.57
		36”(914mm)	B2B49N-2436-TTPNN	1186.78	1238.57
57”(1448mm)	16”(406mm)	18”(457mm)	B2B57N-1618-TTPNN	$ 887.51	$ 916.57
		24”(610mm)	B2B57N-1624-TTPNN	959.00	993.07
		30”(762mm)	B2B57N-1630-TTPNN	1034.46	1073.82
		36”(914mm)	B2B57N-1636-TTPNN	1094.03	1137.57
	24”(610mm)	18”(457mm)	B2B57N-2418-TTPNN	1030.59	1069.57
		24”(610mm)	B2B57N-2424-TTPNN	1114.00	1158.82
		30”(762mm)	B2B57N-2430-TTPNN	1201.38	1252.32
		36”(914mm)	B2B57N-2436-TTPNN	1284.79	1341.57
65”(1651mm)	16”(406mm)	18”(457mm)	B2B65N-1618-TTPNN	$ 953.73	$ 985.56
		24”(610mm)	B2B65N-1624-TTPNN	1033.16	1070.56
		30”(762mm)	B2B65N-1630-TTPNN	1112.59	1155.56
		36”(914mm)	B2B65N-1636-TTPNN	1176.13	1223.56
	24”(610mm)	18”(457mm)	B2B65N-2418-TTPNN	1120.66	1164.06
		24”(610mm)	B2B65N-2424-TTPNN	1212.01	1261.81
		30”(762mm)	B2B65N-2430-TTPNN	1303.36	1359.56
		36”(914mm)	B2B65N-2436-TTPNN	1390.74	1453.06

Freestanding Storage

Storage Cabinet

Catalog Logic

B2 S 49 - 16 36 - T T N P 7 Y R

Product Line
(B2) Be_Hold Be

Product Type
(S) Storage Cabinet

Height
49″
57″
65″

Depth
16″
24″

Width
18″
24″
30″
36″

Case Finish Type
(T) Thermally Fused Laminate - TFL

Front Finish Type
(T) Thermally Fused Laminate - TFL

Handedness
(L) Left Hand
(R) Right Hand
(N) No Hand

Back
(P) Proud

Pull
(7) Crescent
(8) Linear
(9) Classic
(W) Wing
(N) No Pull/Touch Latch

Lock Option
(Y) Locking
(N) No Lock

Close Type
(R) Regular Close

Freestanding Storage

Storage Cabinet

Single Hinged Door

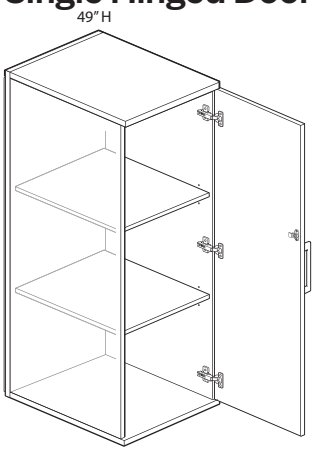

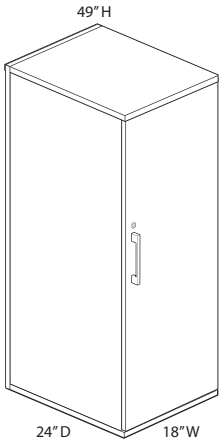

B2S49-TT

Class BH – Open Market

Features

- Includes thermally fused laminate (TFL) storage cabinet with two or three shelves, glides, concealed hinges and 0.75"(19mm) thick finished top.
- Shelves are TFL and match cabinet.
  –49"(1245mm)H cabinet has one fixed and one height adjustable shelf.
  –57"(1448mm)H and 65"(1651mm)H cabinets have one fixed and two height adjustable shelves.
- Glides provide 1"(25mm) leveling adjustment.
- Standard with one right or left hand thermally fused laminate (TFL) door.
- Door pull options include Crescent, Linear, Classic, and Wing. Touch latch (no pull) option also available.
  –Crescent, Linear and Classic pulls are brushed nickel finish.
  –Wing pull available as specifiable trim color.
- Available locking or non-locking.
- Lock plug available in black or chrome.
- Not for use with digital locks.
- For lock options, refer to Lock Program section of the Accessories Price List.

Specification Tips

- Height adjustable shelf inserts into designated mounting locations. For fixed shelf location see Product Details.
- Not for use with:
  –Stack-On Storage
  –Be_Hold Storage legs
- Refer to Specification Guide for product application information.

To Order, Specify:

1) Product number, including:

❶ **Door Handedness:**
- **L** Left Hand
- **R** Right Hand

❷ **Pull Option:** (see side bar)

❸ **Lock Option:**
- **N** No Lock
- **Y** Lock (add **$43.46** list)

2) TFL color for case.
3) TFL color for front.
4) Trim color for Wing pull (if applicable).
5) Trim color for lock plug (if applicable).

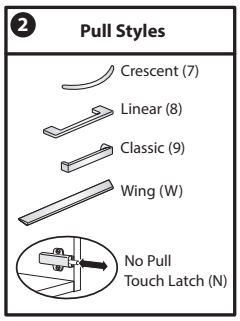

Height	Depth	Width	Pull	Number ❶❷❸	Case TFL A Front TFL A	Case TFL A Front TFL B	Case TFL B Front TFL A	Case TFL B Front TFL B
49"(1245mm)H								
49"(1245mm)	16"(406mm)	18"(457mm)	N	B2S49-1618-TT PN R	$ 976.76	$ 984.01	$ 997.03	$1004.28
			7,8,9	B2S49-1618-TT P R	983.34	990.59	1003.61	1010.86
			W	B2S49-1618-TT PW R	997.82	1005.07	1018.09	1025.34
	24"(610mm)	18"(457mm)	N	B2S49-2418-TT PN R	$ 1142.55	$ 1149.80	$ 1169.33	$ 1176.58
			7,8,9	B2S49-2418-TT P R	1149.13	1156.38	1175.91	1183.16
			W	B2S49-2418-TT PW R	1163.61	1170.86	1190.39	1197.64
57"(1448mm)H								
57"(1448mm)	16"(406mm)	18"(457mm)	N	B2S57-1618-TT PN R	$ 1071.44	$1079.85	$1094.03	$ 1102.44
			7,8,9	B2S57-1618-TT P R	1078.02	1086.43	1100.61	1109.02
			W	B2S57-1618-TT PW R	1092.50	1100.91	1115.09	1123.50
	24"(610mm)	18"(457mm)	N	B2S57-2418-TT PN R	$ 1245.12	$ 1253.53	$ 1274.51	$ 1282.92
			7,8,9	B2S57-2418-TT P R	1251.70	1260.11	1281.09	1289.50
			W	B2S57-2418-TT PW R	1266.18	1274.59	1295.57	1303.98
65"(1651mm)H								
65"(1651mm)	16"(406mm)	18"(457mm)	N	B2S65-1618-TT PN R	$ 1158.23	$ 1167.80	$ 1182.85	$ 1192.42
			7,8,9	B2S65-1618-TT P R	1164.81	1174.38	1189.43	1199.00
			W	B2S65-1618-TT PW R	1179.29	1188.86	1203.91	1213.48
	24"(610mm)	18"(457mm)	N	B2S65-2418-TT PN R	$ 1355.58	$ 1365.15	$ 1387.87	$ 1397.44
			7,8,9	B2S65-2418-TT P R	1362.16	1371.73	1394.45	1404.02
			W	B2S65-2418-TT PW R	1376.64	1386.21	1408.93	1418.50

Freestanding Storage

Storage Cabinet

Double Hinged Door

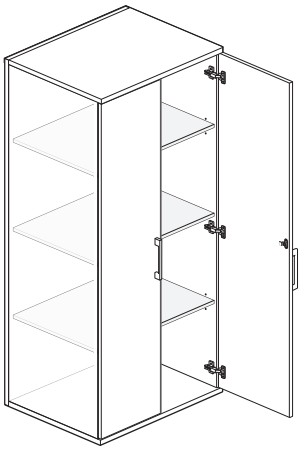

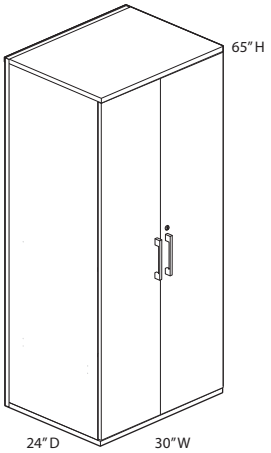

B2S65-TTNP

Class BH – Open Market

Features

- Includes thermally fused laminate (TFL) storage cabinet with two or three shelves, glides, concealed hinges and 0.75"(19mm) thick finished top.
- Shelves are TFL and match case.
  –49"(1245mm)H cabinet has one fixed and one height adjustable shelf.
  –57"(1448mm)H and 65"(1651mm)H cabinets have one fixed and two height adjustable shelves.
- Glides provide 1"(25mm) leveling adjustment.
- Standard with two thermally fused laminate (TFL) doors.
- Door pull options include Crescent, Linear, Classic, and Wing. Touch latch (no pull) option also available
  –Crescent, Linear and Classic pulls are brushed nickel finish and will have a pull on each door.
  –Wing pull available as specifiable trim color. When Wing pull is specified pull will be on the right hand door only.
- Available locking or non-locking. Single lock secures both doors.
- Lock plug available in black or chrome.
- Not for use with digital locks.
- For lock options, refer to Lock Program section of the Accessories Price List.

Specification Tips

- Height adjustable shelf inserts into designated mounting locations. For fixed shelf location see Product Details.
- Not for use with:
  –Stack-On Storage
  –Be_Hold Storage legs
- Refer to Specification Guide for product application information.

To Order, Specify:

1) Product number, including:

❶ **Pull Option:** (see side bar)

❷ **Lock Option:**

N No Lock

Y Lock (add **$43.46** list)

2) TFL color for case.
3) TFL color for front.
4) Trim color for Wing pull (if applicable).
5) Trim color for lock plug (if applicable).

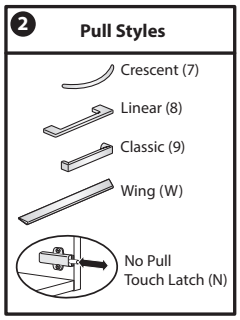

Height	Depth	Width	Pull	Number ❶❷	Case TFL A Front TFL A	Case TFL A Front TFL B	Case TFL B Front TFL A	Case TFL B Front TFL B
49"(1245mm)H								
49"(1245mm)	16"(406mm)	24"(610mm)	N	B2S49-1624-TTNPN R	$ 1162.25	$ 1171.82	$ 1187.33	$ 1196.90
			7,8,9	B2S49-1624-TTNP R	1188.58	1198.15	1213.66	1223.23
			W	B2S49-1624-TTNPW R	1217.54	1227.11	1242.62	1252.19
		30"(762mm)	N	B2S49-1630-TTNPN R	1347.74	1359.63	1377.63	1389.52
			7,8,9	B2S49-1630-TTNP R	1374.07	1385.96	1403.96	1415.85
			W	B2S49-1630-TTNPW R	1403.03	1414.92	1432.92	1444.81
		36"(914mm)	N	B2S49-1636-TTNPN R	1513.48	1527.69	1547.35	1561.56
			7,8,9	B2S49-1636-TTNP R	1539.81	1554.02	1573.68	1587.89
			W	B2S49-1636-TTNPW R	1568.77	1582.98	1602.64	1616.85
	24"(610mm)	24"(610mm)	N	B2S49-2424-TTNPN R	$ 1347.79	$ 1357.36	$ 1380.21	$ 1389.78
			7,8,9	B2S49-2424-TTNP R	1374.12	1383.69	1406.54	1416.11
			W	B2S49-2424-TTNPW R	1403.08	1412.65	1435.50	1445.07
		30"(762mm)	N	B2S49-2430-TTNPN R	1553.03	1564.92	1591.09	1602.98
			7,8,9	B2S49-2430-TTNP R	1579.36	1591.25	1617.42	1629.31
			W	B2S49-2430-TTNPW R	1608.32	1620.21	1646.38	1658.27
		36"(914mm)	N	B2S49-2436-TTNPN R	1758.27	1772.48	1801.97	1816.18
			7,8,9	B2S49-2436-TTNP R	1784.60	1798.81	1828.30	1842.51
			W	B2S49-2436-TTNPW R	1813.56	1827.77	1857.26	1871.47

Freestanding Storage

Storage Cabinet

Height	Depth	Width	Pull	Number ❶❷	Case TFL A Front TFL A	Case TFL A Front TFL B	Case TFL B Front TFL A	Case TFL B Front TFL B
57"(1448mm)H								
57"(1448mm)	16"(406mm)	24"(610mm)	N	B2S57-1624-TTNPN R	$ 1272.71	$ 1283.73	$ 1300.40	$ 1311.42
			7,8,9	B2S57-1624-TTNP R	1299.04	1310.06	1326.73	1337.75
			W	B2S57-1624-TTNPW R	1328.00	1339.02	1355.69	1366.71
		30"(762mm)	N	B2S57-1630-TTNPN R	1489.76	1503.68	1522.84	1536.76
			7,8,9	B2S57-1630-TTNP R	1516.09	1530.01	1549.17	1563.09
			W	B2S57-1630-TTNPW R	1545.05	1558.97	1578.13	1592.05
		36"(914mm)	N	B2S57-1636-TTNPN R	1671.28	1687.81	1708.63	1725.16
			7,8,9	B2S57-1636-TTNP R	1697.61	1714.14	1734.96	1751.49
			W	B2S57-1636-TTNPW R	1726.57	1743.10	1763.92	1780.45
	24"(610mm)	24"(610mm)	N	B2S57-2424-TTNPN R	$ 1466.14	$ 1477.16	$ 1501.46	$ 1512.48
			7,8,9	B2S57-2424-TTNP R	1492.47	1503.49	1527.79	1538.81
			W	B2S57-2424-TTNPW R	1521.43	1532.45	1556.75	1567.77
		30"(762mm)	N	B2S57-2430-TTNPN R	1702.94	1716.86	1744.48	1758.40
			7,8,9	B2S57-2430-TTNP R	1729.27	1743.19	1770.81	1784.73
			W	B2S57-2430-TTNPW R	1758.23	1772.15	1799.77	1813.69
		36"(914mm)	N	B2S57-2436-TTNPN R	1923.96	1940.49	1971.43	1987.96
			7,8,9	B2S57-2436-TTNP R	1950.29	1966.82	1997.76	2014.29
			W	B2S57-2436-TTNPW R	1979.25	1995.78	2026.72	2043.25
65"(1651mm)H								
65"(1651mm)	16"(406mm)	24"(610mm)	N	B2S65-1624-TTNPN R	$ 1391.06	$1403.82	$ 1421.36	$ 1434.12
			7,8,9	B2S65-1624-TTNP R	1417.39	1430.15	1447.69	1460.45
			W	B2S65-1624-TTNPW R	1446.35	1459.11	1476.65	1489.41
		30"(762mm)	N	B2S65-1630-TTNPN R	1623.89	1639.84	1659.87	1675.82
			7,8,9	B2S65-1630-TTNP R	1650.22	1666.17	1686.20	1702.15
			W	B2S65-1630-TTNPW R	1679.18	1695.13	1715.16	1731.11
		36"(914mm)	N	B2S65-1636-TTNPN R	1821.19	1840.04	1861.73	1880.58
			7,8,9	B2S65-1636-TTNP R	1847.52	1866.37	1888.06	1906.91
			W	B2S65-1636-TTNPW R	1876.48	1895.33	1917.02	1935.87
	24"(610mm)	24"(610mm)	N	B2S65-2424-TTNPN R	$ 1608.16	$1620.92	$ 1646.96	$ 1659.72
			7,8,9	B2S65-2424-TTNP R	1634.49	1647.25	1673.29	1686.05
			W	B2S65-2424-TTNPW R	1663.45	1676.21	1702.25	1715.01
		30"(762mm)	N	B2S65-2430-TTNPN R	1860.74	1876.69	1906.05	1922.00
			7,8,9	B2S65-2430-TTNP R	1887.07	1903.02	1932.38	1948.33
			W	B2S65-2430-TTNPW R	1916.03	1931.98	1961.34	1977.29
		36"(914mm)	N	B2S65-2436-TTNPN R	2097.54	2116.39	2149.07	2167.92
			7,8,9	B2S65-2436-TTNP R	2123.87	2142.72	2175.40	2194.25
			W	B2S65-2436-TTNPW R	2152.83	2171.68	2204.36	2223.21

Freestanding Storage

Wardrobe

Catalog Logic

B2 W 49 - 16 18 - T TN L P 7 Y R

Product Line
- (B2) Be_Hold Be

Product Type
- (W) Wardrobe

Height
- 41″
- 49″
- 57″
- 65″

Depth
- 16″
- 18″
- 24″
- 30″

Width
- 12″
- 15″
- 18″

Case Finish Type
- (T) Thermally Fused Laminate - TFL

Front Finish Type
- (TN) Thermally Fused Laminate - TFL

Handedness
- (L) Left Hand
- (R) Right Hand

Back
- (P) Proud

Pull
- (7) Crescent
- (8) Linear
- (9) Classic
- (W) Wing
- (N) No Pull/Touch Latch

Lock Option
- (Y) Locking
- (N) No Lock

Close Type
- (R) Regular Close

Freestanding Storage

Single Hinged Door Wardrobe

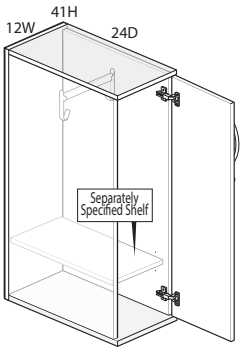

B2W41-TTN

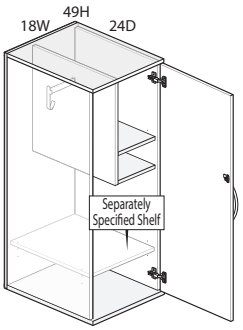

B2W49-TTN

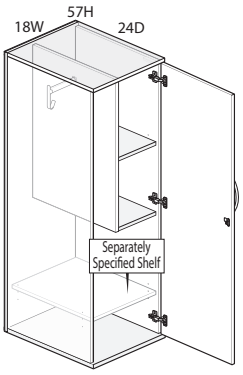

B2W57-TTN

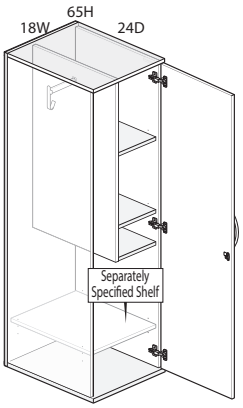

B2W65-TTN

Class BH – GSA: Open Market

Features

- Includes wardrobe cabinet with thermally fused laminate (TFL) case and TFL door with concealed hinges, finished top and glides with 1"(25mm) leveling adjustment.
- Optional door pull options include Crescent, Linear, Classic, and Wing. Touch latch (no pull) option also available.
  –Crescent, Linear and Classic pulls are brushed nickel finish.
  –Wing pull available as specifiable trim color.
- 12"(305mm)W and 15"(381mm)W wardrobe units feature two coat hooks and one full width coat rod.
- 18"(457mm)W wardrobe units feature:
  –41"(1041mm)H - one coat hook, one 5.25"(133mm)W coat rod and one 10.5"(267mm)W fixed height shelf.
  –49"(1245mm)H and 57"(1448mm)H - one coat hook, one 5.25"(133mm)W coat rod and two 10.5"(267mm)W shelves; one height adjustable and one fixed height.
  –65"(1651mm)H - one coat hook, one 5.25"(133mm)W coat rod and three 10.5"(267mm)W shelves; two height adjustable and one fixed height.
- Separately specified adjustable height bottom shelf available.
- Available locking or non-locking.
- Lock plug available in black or chrome.
- Not for use with digital locks.
- For lock options, refer to Lock Program section of the Accessories Price List.

Specification Tips

- 12"(305mm)W storage must be ganged together or attached to Compose or Compose Connections.
- Not for use with Stack-On Storage.
- Additional accessories are available and can be specified separately.
- 3H Modular Lower Storage units will not horizontally align with 41"(1041mm)H Freestanding Storage.
- For use with Worksurface-to-Storage bracket (ZUBW-PN) or Tower-to-Desk bracket (ABBH-SN) to support a convergent worksurface.

To Order, Specify:

1) Product number, including:

❶ **Door Handedness:**
- **L** Left Hand
- **R** Right Hand

❷ **Pull Option:** (see side bar)

❸ **Lock Option:**
- **N** No Lock
- **Y** Lock (add **$43.46** list)

2) TFL color for case.
3) TFL color for front.
4) Trim color for Wing pull (if applicable).
5) Trim color for lock plug (if applicable).

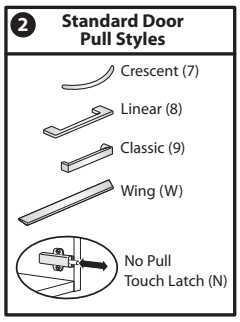

Freestanding Storage

Single Hinged Door Wardrobe

Height	Depth	Width	Pull	Number ❶❷❸	Case TFL A Front TFL A	Case TFL A Front TFL B	Case TFL B Front TFL A	Case TFL B Front TFL B
41"(1041mm)H								
41"(1041mm)	16"(406mm)	12"(305mm)	N	B2W41-1612-TTN PN R	$1052.26	$ 1056.18	$ 1078.41	$1082.33
			7,8,9	B2W41-1612-TTN P R	1059.50	1063.42	1085.65	1089.57
			W	B2W41-1612-TTN PW R	1075.42	1079.34	1101.57	1105.49
		15"(381mm)	N	B2W41-1615-TTN PN R	1107.22	1112.26	1135.13	1140.17
			7,8,9	B2W41-1615-TTN P R	1114.46	1119.50	1142.37	1147.41
			W	B2W41-1615-TTN PW R	1130.38	1135.42	1158.29	1163.33
		18"(457mm)	N	B2W41-1618-TTN PN R	1153.46	1159.34	1182.85	1188.73
			7,8,9	B2W41-1618-TTN P R	1160.70	1166.58	1190.09	1195.97
			W	B2W41-1618-TTN PW R	1176.62	1182.50	1206.01	1211.89
41"(1041mm)	18"(457mm)	12"(305mm)	N	B2W41-1812-TTN PN R	$1069.62	$1073.54	$1097.05	$ 1100.97
			7,8,9	B2W41-1812-TTN P R	1076.86	1080.78	1104.29	1108.21
			W	B2W41-1812-TTN PW R	1092.78	1096.70	1120.21	1124.13
		15"(381mm)	N	B2W41-1815-TTN PN R	1133.26	1138.30	1163.09	1168.13
			7,8,9	B2W41-1815-TTN P R	1140.50	1145.54	1170.33	1175.37
			W	B2W41-1815-TTN PW R	1156.42	1161.46	1186.25	1191.29
		18"(457mm)	N	B2W41-1818-TTN PN R	1179.50	1185.38	1210.81	1216.69
			7,8,9	B2W41-1818-TTN P R	1186.74	1192.62	1218.05	1223.93
			W	B2W41-1818-TTN PW R	1202.66	1208.54	1233.97	1239.85
41"(1041mm)	24"(610mm)	12"(305mm)	N	B2W41-2412-TTN PN R	$ 1147.74	$ 1151.66	$ 1180.93	$ 1184.85
			7,8,9	B2W41-2412-TTN P R	1154.98	1158.90	1188.17	1192.09
			W	B2W41-2412-TTN PW R	1170.90	1174.82	1204.09	1208.01
		15"(381mm)	N	B2W41-2415-TTN PN R	1211.38	1216.42	1246.97	1252.01
			7,8,9	B2W41-2415-TTN P R	1218.62	1223.66	1254.21	1259.25
			W	B2W41-2415-TTN PW R	1234.54	1239.58	1270.13	1275.17
		18"(457mm)	N	B2W41-2418-TTN PN R	1266.30	1272.18	1304.01	1309.89
			7,8,9	B2W41-2418-TTN P R	1273.54	1279.42	1311.25	1317.13
			W	B2W41-2418-TTN PW R	1289.46	1295.34	1327.17	1333.05
41"(1041mm)	30"(762mm)	12"(305mm)	N	B2W41-3012-TTN PN R	$1225.86	$ 1229.78	$ 1264.81	$ 1268.73
			7,8,9	B2W41-3012-TTN P R	1233.10	1237.02	1272.05	1275.97
			W	B2W41-3012-TTN PW R	1249.02	1252.94	1287.97	1291.89
		15"(381mm)	N	B2W41-3015-TTN PN R	1298.18	1303.22	1340.17	1345.21
			7,8,9	B2W41-3015-TTN P R	1305.42	1310.46	1347.41	1352.45
			W	B2W41-3015-TTN PW R	1321.34	1326.38	1363.33	1368.37
		18"(457mm)	N	B2W41-3018-TTN PN R	1353.10	1358.98	1397.21	1403.09
			7,8,9	B2W41-3018-TTN P R	1360.34	1366.22	1404.45	1410.33
			W	B2W41-3018-TTN PW R	1376.26	1382.14	1420.37	1426.25
49"(1245mm)H								
49"(1245mm)	16"(406mm)	12"(305mm)	N	B2W49-1612-TTN PN R	$1073.33	$1078.09	$ 1103.48	$ 1108.24
			7,8,9	B2W49-1612-TTN P R	1080.57	1085.33	1110.72	1115.48
			W	B2W49-1612-TTN PW R	1096.49	1101.25	1126.64	1131.40
		15"(381mm)	N	B2W49-1615-TTN PN R	1116.89	1122.77	1148.80	1154.68
			7,8,9	B2W49-1615-TTN P R	1124.13	1130.01	1156.04	1161.92
			W	B2W49-1615-TTN PW R	1140.05	1145.93	1171.96	1177.84
		18"(457mm)	N	B2W49-1618-TTN PN R	1160.45	1167.45	1194.12	1201.12
			7,8,9	B2W49-1618-TTN P R	1167.69	1174.69	1201.36	1208.36
			W	B2W49-1618-TTN PW R	1183.61	1190.61	1217.28	1224.28

Freestanding Storage

Single Hinged Door Wardrobe

Height	Depth	Width	Pull	Number ❶❷❸	Case TFL A Front TFL A	Case TFL A Front TFL B	Case TFL B Front TFL A	Case TFL B Front TFL B
49"(1245mm)	18"(457mm)	12"(305mm)	N	B2W49-1812-TTN PN R	$1099.37	$ 1104.13	$ 1131.44	$ 1136.20
			7,8,9	B2W49-1812-TTN P R	1106.61	1111.37	1138.68	1143.44
			W	B2W49-1812-TTN PW R	1122.53	1127.29	1154.60	1159.36
		15"(381mm)	N	B2W49-1815-TTN PN R	1151.61	1157.49	1186.08	1191.96
			7,8,9	B2W49-1815-TTN P R	1158.85	1164.73	1193.32	1199.20
			W	B2W49-1815-TTN PW R	1174.77	1180.65	1209.24	1215.12
		18"(457mm)	N	B2W49-1818-TTN PN R	1195.17	1202.17	1231.40	1238.40
			7,8,9	B2W49-1818-TTN P R	1202.41	1209.41	1238.64	1245.64
			W	B2W49-1818-TTN PW R	1218.33	1225.33	1254.56	1261.56
49"(1245mm)	24"(610mm)	12"(305mm)	N	B2W49-2412- TTN PN R	$ 1186.17	$ 1190.93	$1224.64	$1229.40
			7,8,9	B2W49-2412- TTN P R	1193.41	1198.17	1231.88	1236.64
			W	B2W49-2412- TTN PW R	1209.33	1214.09	1247.80	1252.56
		15"(381mm)	N	B2W49-2415- TTN PN R	1238.41	1244.29	1279.28	1285.16
			7,8,9	B2W49-2415- TTN P R	1245.65	1251.53	1286.52	1292.40
			W	B2W49-2415- TTN PW R	1261.57	1267.45	1302.44	1308.32
		18"(457mm)	N	B2W49-2418- TTN PN R	1290.65	1297.65	1333.92	1340.92
			7,8,9	B2W49-2418- TTN P R	1297.89	1304.89	1341.16	1348.16
			W	B2W49-2418- TTN PW R	1313.81	1320.81	1357.08	1364.08
49"(1245mm)	30"(762mm)	12"(305mm)	N	B2W49-3012-TTN PN R	$ 1272.97	$ 1277.73	$ 1317.84	$1322.60
			7,8,9	B2W49-3012-TTN P R	1280.21	1284.97	1325.08	1329.84
			W	B2W49-3012-TTN PW R	1296.13	1300.89	1341.00	1345.76
		15"(381mm)	N	B2W49-3015-TTN PN R	1333.89	1339.77	1381.80	1387.68
			7,8,9	B2W49-3015-TTN P R	1341.13	1347.01	1389.04	1394.92
			W	B2W49-3015-TTN PW R	1357.05	1362.93	1404.96	1410.84
		18"(457mm)	N	B2W49-3018-TTN PN R	1386.13	1393.13	1436.44	1443.44
			7,8,9	B2W49-3018-TTN P R	1393.37	1400.37	1443.68	1450.68
			W	B2W49-3018-TTN PW R	1409.29	1416.29	1459.60	1466.60
57"(1448mm)H								
57"(1448mm)	16"(406mm)	12"(305mm)	N	B2W57-1612-TTN PN R	$ 1038.61	$1043.93	$ 1064.41	$1069.73
			7,8,9	B2W57-1612-TTN P R	1045.85	1051.17	1071.65	1076.97
			W	B2W57-1612-TTN PW R	1061.77	1067.09	1087.57	1092.89
		15"(381mm)	N	B2W57-1615-TTN PN R	1090.89	1097.61	1118.73	1125.45
			7,8,9	B2W57-1615-TTN P R	1098.13	1104.85	1125.97	1132.69
			W	B2W57-1615-TTN PW R	1114.05	1120.77	1141.89	1148.61
		18"(457mm)	N	B2W57-1618-TTN PN R	1143.17	1151.29	1173.05	1181.17
			7,8,9	B2W57-1618-TTN P R	1150.41	1158.53	1180.29	1188.41
			W	B2W57-1618-TTN PW R	1166.33	1174.45	1196.21	1204.33
57"(1448mm)	18"(457mm)	12"(305mm)	N	B2W57-1812-TTN PN R	$1064.65	$1069.97	$1092.37	$1097.69
			7,8,9	B2W57-1812-TTN P R	1071.89	1077.21	1099.61	1104.93
			W	B2W57-1812-TTN PW R	1087.81	1093.13	1115.53	1120.85
		15"(381mm)	N	B2W57-1815-TTN PN R	1125.61	1132.33	1156.01	1162.73
			7,8,9	B2W57-1815-TTN P R	1132.85	1139.57	1163.25	1169.97
			W	B2W57-1815-TTN PW R	1148.77	1155.49	1179.17	1185.89
		18"(457mm)	N	B2W57-1818-TTN PN R	1177.89	1186.01	1210.33	1218.45
			7,8,9	B2W57-1818-TTN P R	1185.13	1193.25	1217.57	1225.69
			W	B2W57-1818-TTN PW R	1201.05	1209.17	1233.49	1241.61

Freestanding Storage

Single Hinged Door Wardrobe

Height	Depth	Width	Pull	Number ❶❷❸	Case TFL A Front TFL A	Case TFL A Front TFL B	Case TFL B Front TFL A	Case TFL B Front TFL B
57"(1448mm)	24"(610mm)	12"(305mm)	N	B2W57-2412-TTN PN R	$ 1160.13	$ 1165.45	$ 1194.89	$ 1200.21
			7,8,9	B2W57-2412-TTN P R	1167.37	1172.69	1202.13	1207.45
			W	B2W57-2412-TTN PW R	1183.29	1188.61	1218.05	1223.37
		15"(381mm)	N	B2W57-2415-TTN PN R	1221.09	1227.81	1258.53	1265.25
			7,8,9	B2W57-2415-TTN P R	1228.33	1235.05	1265.77	1272.49
			W	B2W57-2415-TTN PW R	1244.25	1250.97	1281.69	1288.41
		18"(457mm)	N	B2W57-2418-TTN PN R	1282.05	1290.17	1322.17	1330.29
			7,8,9	B2W57-2418-TTN P R	1289.29	1297.41	1329.41	1337.53
			W	B2W57-2418-TTN PW R	1305.21	1313.33	1345.33	1353.45
57"(1448mm)	30"(762mm)	12"(305mm)	N	B2W57-3012- TTN PN R	$1264.29	$ 1269.61	$1306.73	$ 1312.05
			7,8,9	B2W57-3012- TTN P R	1271.53	1276.85	1313.97	1319.29
			W	B2W57-3012- TTN PW R	1287.45	1292.77	1329.89	1335.21
		15"(381mm)	N	B2W57-3015- TTN PN R	1333.93	1340.65	1379.69	1386.41
			7,8,9	B2W57-3015- TTN P R	1341.17	1347.89	1386.93	1393.65
			W	B2W57-3015- TTN PW R	1357.09	1363.81	1402.85	1409.57
		18"(457mm)	N	B2W57-3018- TTN PN R	1394.89	1403.01	1443.33	1451.45
			7,8,9	B2W57-3018- TTN P R	1402.13	1410.25	1450.57	1458.69
			W	B2W57-3018- TTN PW R	1418.05	1426.17	1466.49	1474.61
65"(1651mm)H								
65"(1651mm)	16"(406mm)	12"(305mm)	N	B2W65-1612-TTN PN R	$1206.65	$ 1212.81	$ 1245.10	$ 1251.26
			7,8,9	B2W65-1612-TTN P R	1213.89	1220.05	1252.34	1258.50
			W	B2W65-1612-TTN PW R	1229.81	1235.97	1268.26	1274.42
		15"(381mm)	N	B2W65-1615-TTN PN R	1267.65	1275.49	1308.42	1316.26
			7,8,9	B2W65-1615-TTN P R	1274.89	1282.73	1315.66	1323.50
			W	B2W65-1615-TTN PW R	1290.81	1298.65	1331.58	1339.42
		18"(457mm)	N	B2W65-1618-TTN PN R	1319.93	1329.17	1362.74	1371.98
			7,8,9	B2W65-1618-TTN P R	1327.17	1336.41	1369.98	1379.22
			W	B2W65-1618-TTN PW R	1343.09	1352.33	1385.90	1395.14
65"(1651mm)	18"(457mm)	12"(305mm)	N	B2W65-1812-TTN PN R	$ 1241.37	$ 1247.53	$1282.38	$1288.54
			7,8,9	B2W65-1812-TTN P R	1248.61	1254.77	1289.62	1295.78
			W	B2W65-1812-TTN PW R	1264.53	1270.69	1305.54	1311.70
		15"(381mm)	N	B2W65-1815-TTN PN R	1311.05	1318.89	1355.02	1362.86
			7,8,9	B2W65-1815-TTN P R	1318.29	1326.13	1362.26	1370.10
			W	B2W65-1815-TTN PW R	1334.21	1342.05	1378.18	1386.02
		18"(457mm)	N	B2W65-1818-TTN PN R	1363.33	1372.57	1409.34	1418.58
			7,8,9	B2W65-1818-TTN P R	1370.57	1379.81	1416.58	1425.82
			W	B2W65-1818-TTN PW R	1386.49	1395.73	1432.50	1441.74
65"(1651mm)	24"(610mm)	12"(305mm)	N	B2W65-2412-TTN PN R	$ 1354.21	$1360.37	$1403.54	$1409.70
			7,8,9	B2W65-2412-TTN P R	1361.45	1367.61	1410.78	1416.94
			W	B2W65-2412-TTN PW R	1377.37	1383.53	1426.70	1432.86
		15"(381mm)	N	B2W65-2415-TTN PN R	1423.89	1431.73	1476.18	1484.02
			7,8,9	B2W65-2415-TTN P R	1431.13	1438.97	1483.42	1491.26
			W	B2W65-2415-TTN PW R	1447.05	1454.89	1499.34	1507.18
		18"(457mm)	N	B2W65-2418-TTN PN R	1484.85	1494.09	1539.82	1549.06
			7,8,9	B2W65-2418-TTN P R	1492.09	1501.33	1547.06	1556.30
			W	B2W65-2418-TTN PW R	1508.01	1517.25	1562.98	1572.22

Freestanding Storage

Single Hinged Door Wardrobe

Height	Depth	Width	Pull	Number ❶❷❸	Case TFL A Front TFL A	Case TFL A Front TFL B	Case TFL B Front TFL A	Case TFL B Front TFL B
65"(1651mm)	30"(762mm)	12"(305mm)	N	B2W65-3012-TTN PN R	$1467.05	$ 1473.21	$ 1524.70	$1530.86
			7,8,9	B2W65-3012-TTN P R	1474.29	1480.45	1531.94	1538.10
			W	B2W65-3012-TTN PW R	1490.21	1496.37	1547.86	1554.02
		15"(381mm)	N	B2W65-3015-TTN PN R	1545.41	1553.25	1606.66	1614.50
			7,8,9	B2W65-3015-TTN P R	1552.65	1560.49	1613.90	1621.74
			W	B2W65-3015-TTN PW R	1568.57	1576.41	1629.82	1637.66
		18"(457mm)	N	B2W65-3018-TTN PN R	1606.37	1615.61	1670.30	1679.54
			7,8,9	B2W65-3018-TTN P R	1613.61	1622.85	1677.54	1686.78
			W	B2W65-3018-TTN PW R	1629.53	1638.77	1693.46	1702.70

Freestanding Storage

Personal Storage Tower

Catalog Logic

B2 T L A H - 49 24 – T TN B P 7 Y R

Product Line
- (B2) Be_Hold Be

Product Type
- (T) Tower

Valet
- *15″ Wide*
  - (N) No Valet
- *24″ Wide*
  - (R) Right Hand
  - (L) Left Hand

Upper Storage
- (A) Hinged Door - Right Hand
- (B) Hinged Door - Left Hand
- (C) Bookcase - Right Hand User Access
- (D) Bookcase - Left Hand User Access
- (E) Bookcase - Front User Access

Lower Storage
- (H) Box/Box/File
- (J) File/File

Height
- 41″
- 49″
- 57″
- 65″

Depth
- 18″
- 24″
- 30″

Case Finish Type
- (T) Thermally Fused Laminate - TFL

Front Finish Type
- (TN) Thermally Fused Laminate - TFL

Drawer Construction
- (B) Black Composite Wood

Back
- (P) Proud

Pull
- (7) Crescent
- (8) Linear
- (9) Classic
- (Q) Blade (drawers only)
- (L) Blade with Touch Latch Door(s)
- (W) Wing

Lock Option
- (Y) Locking
- (N) No Lock

Close Type
- (R) Regular Close

Freestanding Storage

Personal Storage Towers - 15"W

Front Bookcase Upper Storage

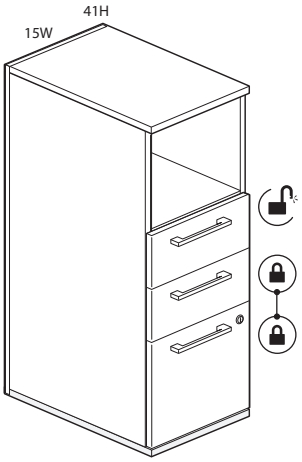

B2TNEH-4130

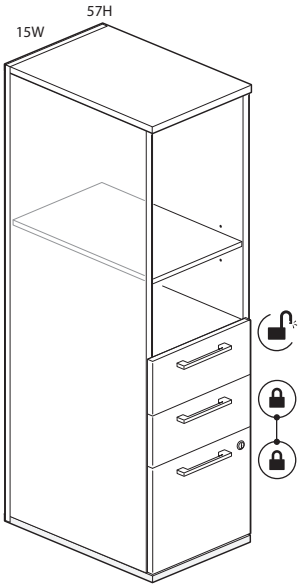

B2TNEH-5730

Class BH – Open Market

Features

- Includes thermally fused laminate (TFL) case and drawer fronts with Box/Box/File or File/File lower storage pedestal, bookcase upper storage, finished top and glides.
- 49"(1245mm)H, 57"(1448mm)H and 65"(1651mm)H units include one height adjustable shelf.
- Height adjustable shelf inserts into designated mounting locations. See Product Details.
- Drawers have full extension steel ball-bearing slides. Drawer depth is 12"(305mm).
- Pull options include Crescent, Linear, Classic, Blade and Wing.
  –Crescent, Linear and Classic pulls are brushed nickel finish.
  –Blade and Wing pull available as specifiable trim color.
- Glides provide 1"(25mm) adjustment range.
- Available locking or non-locking.
  –Box/Box/File standard with top drawer non-locking and single lock to secure bottom drawers.
  –File/File single lock secures both drawers.
- Lock plug available in black or chrome.
- Not for use with digital locks.
- For lock options, refer to Lock Program section of the Accessories Price List.

Specification Tips

- For use as freestanding storage; does not require counterweight or ganging kit. Exception: 15"(381mm)W x 18"(457mm)D units must be ganged together or attached to Compose or Compose Connections.
- 3H Modular Lower Storage will not horizontally align with 41"(1041mm)H Freestanding Storage.
- For use with separately specified:
  –Worksurface to storage bracket (ZUBW-PN) or tower to desk bracket (ABBH-SN) to support a convergent worksurface.
  –TFL accessory shelf (B2ASE)
- Not for use with:
  –Stack-on Storage
  –Personal Drawer
- File drawer accommodates side-to-side and front-to-back letter filing. File drawer does not accommodate legal filing.
- Box drawer for use with separately specified accessories:
  –Drawer Tray
  –Drawer Liner
  –Drawer Dividers
  –Organizational Rings
  –Personal Tray
  –Pencil Tray

To Order, Specify:

1) Product number, including:

❶ **Pull Option:** (see side bar)

❷ **Lock Option:**

N No Lock

Y Lock (add **$43.46** list)

2) TFL color for case.
3) Front TFL color.
4) Pull color (Blade and Wing).
5) Trim color for lock plug (if applicable).

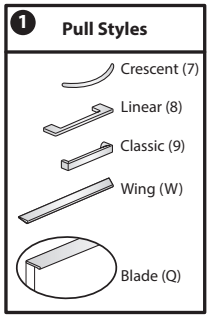

Freestanding Storage

Personal Storage Towers - 15"W

Height	Depth	Width	Pull	Number ❶❷	Case TFL A Front TFL A	Case TFL A Front TFL B	Case TFL B Front TFL A	Case TFL B Front TFL B
41"(1041mm)H								
Box/Box/File								
41"(1041mm)	18"(457mm)	15"(381mm)	7,8,9	B2TNEH-4118-TTNBP R	$ 1227.36	$1230.24	$ 1293.72	$1296.60
			W	B2TNEH-4118-TTNBPW R	1272.54	1275.42	1338.90	1341.78
			Q	B2TNEH-4118-TTNBPQ R	1288.98	1291.86	1355.34	1358.22
	24"(610mm)	15"(381mm)	7,8,9	B2TNEH-4124-TTNBP R	1350.60	1353.48	1507.44	1510.32
			W	B2TNEH-4124-TTNBPW R	1395.78	1398.66	1552.62	1555.50
			Q	B2TNEH-4124-TTNBPQ R	1412.22	1415.10	1569.06	1571.94
	30"(762mm)	15"(381mm)	7,8,9	B2TNEH-4130-TTNBP R	1473.84	1476.72	1721.16	1724.04
			W	B2TNEH-4130-TTNBPW R	1519.02	1521.90	1766.34	1769.22
			Q	B2TNEH-4130-TTNBPQ R	1535.46	1538.34	1782.78	1785.66
File/File								
41"(1041mm)	18"(457mm)	15"(381mm)	7,8,9	B2TNEJ-4118-TTNBP R	$1226.00	$ 1228.88	$1292.36	$ 1295.24
			W	B2TNEJ-4118-TTNBPW R	1256.12	1259.00	1322.48	1325.36
			Q	B2TNEJ-4118-TTNBPQ R	1267.08	1269.96	1333.44	1336.32
	24"(610mm)	15"(381mm)	7,8,9	B2TNEJ-4124-TTNBP R	1349.24	1352.12	1506.08	1508.96
			W	B2TNEJ-4124-TTNBPW R	1379.36	1382.24	1536.20	1539.08
			Q	B2TNEJ-4124-TTNBPQ R	1390.32	1393.20	1547.16	1550.04
	30"(762mm)	15"(381mm)	7,8,9	B2TNEJ-4130-TTNBP R	1472.48	1475.36	1719.80	1722.68
			W	B2TNEJ-4130-TTNBPW R	1502.60	1505.48	1749.92	1752.80
			Q	B2TNEJ-4130-TTNBPQ R	1513.56	1516.44	1760.88	1763.76
49"(1245mm)H								
Box/Box/File								
49"(1245mm)	18"(457mm)	15"(381mm)	7,8,9	B2TNEH-4918-TTNBP R	$1293.04	$ 1295.92	$ 1362.76	$1365.64
			W	B2TNEH-4918-TTNBPW R	1338.22	1341.10	1407.94	1410.82
			Q	B2TNEH-4918-TTNBPQ R	1354.66	1357.54	1424.38	1427.26
	24"(610mm)	15"(381mm)	7,8,9	B2TNEH-4924-TTNBP R	1416.28	1419.16	1576.48	1579.36
			W	B2TNEH-4924-TTNBPW R	1461.46	1464.34	1621.66	1624.54
			Q	B2TNEH-4924-TTNBPQ R	1477.90	1480.78	1638.10	1640.98
	30"(762mm)	15"(381mm)	7,8,9	B2TNEH-4930-TTNBP R	1539.52	1542.40	1790.20	1793.08
			W	B2TNEH-4930-TTNBPW R	1584.70	1587.58	1835.38	1838.26
			Q	B2TNEH-4930-TTNBPQ R	1601.14	1604.02	1851.82	1854.70
File/File								
49"(1245mm)	18"(457mm)	15"(381mm)	7,8,9	B2TNEJ-4918-TTNBP R	$ 1291.68	$1294.56	$ 1361.40	$1364.28
			W	B2TNEJ-4918-TTNBPW R	1321.80	1324.68	1391.52	1394.40
			Q	B2TNEJ-4918-TTNBPQ R	1332.76	1335.64	1402.48	1405.36
	24"(610mm)	15"(381mm)	7,8,9	B2TNEJ-4924-TTNBP R	1414.92	1417.80	1575.12	1578.00
			W	B2TNEJ-4924-TTNBPW R	1445.04	1447.92	1605.24	1608.12
			Q	B2TNEJ-4924-TTNBPQ R	1456.00	1458.88	1616.20	1619.08
	30"(762mm)	15"(381mm)	7,8,9	B2TNEJ-4930-TTNBP R	1538.16	1541.04	1788.84	1791.72
			W	B2TNEJ-4930-TTNBPW R	1568.28	1571.16	1818.96	1821.84
			Q	B2TNEJ-4930-TTNBPQ R	1579.24	1582.12	1829.92	1832.80

Freestanding Storage

Personal Storage Towers - 15"W

Height	Depth	Width	Pull	Number ❶❷	Case TFL A Front TFL A	Case TFL A Front TFL B	Case TFL B Front TFL A	Case TFL B Front TFL B
57"(1448mm)H								
Box/Box/File								
57"(1448mm)	18"(457mm)	15"(381mm)	7,8,9	B2TNEH-5718-TTNBP R	$ 1358.72	$ 1361.60	$ 1431.80	$1434.68
			W	B2TNEH-5718-TTNBPW R	1403.90	1406.78	1476.98	1479.86
			Q	B2TNEH-5718-TTNBPQ R	1420.34	1423.22	1493.42	1496.30
	24"(610mm)	15"(381mm)	7,8,9	B2TNEH-5724-TTNBP R	1481.96	1484.84	1645.52	1648.40
			W	B2TNEH-5724-TTNBPW R	1527.14	1530.02	1690.70	1693.58
			Q	B2TNEH-5724-TTNBPQ R	1543.58	1546.46	1707.14	1710.02
	30"(762mm)	15"(381mm)	7,8,9	B2TNEH-5730-TTNBP R	1605.20	1608.08	1859.24	1862.12
			W	B2TNEH-5730-TTNBPW R	1650.38	1653.26	1904.42	1907.30
			Q	B2TNEH-5730-TTNBPQ R	1666.82	1669.70	1920.86	1923.74
File/File								
57"(1448mm)	18"(457mm)	15"(381mm)	7,8,9	B2TNEJ-5718-TTNBP R	$ 1357.36	$1360.24	$1430.44	$1433.32
			W	B2TNEJ-5718-TTNBPW R	1387.48	1390.36	1460.56	1463.44
			Q	B2TNEJ-5718-TTNBPQ R	1398.44	1401.32	1471.52	1474.40
	24"(610mm)	15"(381mm)	7,8,9	B2TNEJ-5724-TTNBP R	1480.60	1483.48	1644.16	1647.04
			W	B2TNEJ-5724-TTNBPW R	1510.72	1513.60	1674.28	1677.16
			Q	B2TNEJ-5724-TTNBPQ R	1521.68	1524.56	1685.24	1688.12
	30"(762mm)	15"(381mm)	7,8,9	B2TNEJ-5730-TTNBP R	1603.84	1606.72	1857.88	1860.76
			W	B2TNEJ-5730-TTNBPW R	1633.96	1636.84	1888.00	1890.88
			Q	B2TNEJ-5730-TTNBPQ R	1644.92	1647.80	1898.96	1901.84
65"(1651mm)H								
Box/Box/File								
65"(1651mm)	18"(457mm)	15"(381mm)	7,8,9	B2TNEH-6518-TTNBP R	$1424.40	$ 1427.28	$1500.84	$ 1503.72
			W	B2TNEH-6518-TTNBPW R	1469.58	1472.46	1546.02	1548.90
			Q	B2TNEH-6518-TTNBPQ R	1486.02	1488.90	1562.46	1565.34
	24"(610mm)	15"(381mm)	7,8,9	B2TNEH-6524-TTNBP R	1547.64	1550.52	1714.56	1717.44
			W	B2TNEH-6524-TTNBPW R	1592.82	1595.70	1759.74	1762.62
			Q	B2TNEH-6524-TTNBPQ R	1609.26	1612.14	1776.18	1779.06
	30"(762mm)	15"(381mm)	7,8,9	B2TNEH-6530-TTNBP R	1670.88	1673.76	1928.28	1931.16
			W	B2TNEH-6530-TTNBPW R	1716.06	1718.94	1973.46	1976.34
			Q	B2TNEH-6530-TTNBPQ R	1732.50	1735.38	1989.90	1992.78
File/File								
65"(1651mm)	18"(457mm)	15"(381mm)	7,8,9	B2TNEJ-6518-TTNBP R	$1423.04	$1425.92	$1499.48	$1502.36
			W	B2TNEJ-6518-TTNBPW R	1453.16	1456.04	1529.60	1532.48
			Q	B2TNEJ-6518-TTNBPQ R	1464.12	1467.00	1540.56	1543.44
	24"(610mm)	15"(381mm)	7,8,9	B2TNEJ-6524-TTNBP R	1546.28	1549.16	1713.20	1716.08
			W	B2TNEJ-6524-TTNBPW R	1576.40	1579.28	1743.32	1746.20
			Q	B2TNEJ-6524-TTNBPQ R	1587.36	1590.24	1754.28	1757.16
	30"(762mm)	15"(381mm)	7,8,9	B2TNEJ-6530-TTNBP R	1669.52	1672.40	1926.92	1929.80
			W	B2TNEJ-6530-TTNBPW R	1699.64	1702.52	1957.04	1959.92
			Q	B2TNEJ-6530-TTNBPQ R	1710.60	1713.48	1968.00	1970.88

Freestanding Storage

Personal Storage Towers - 15"W

Side Bookcase Upper Storage

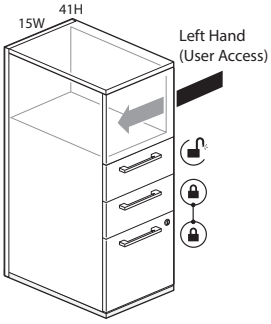

B2TNDH-4130

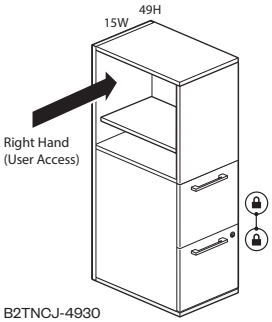

B2TNCJ-4930

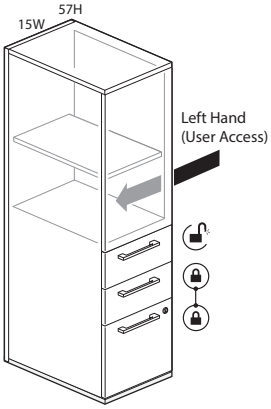

B2TNDH-5730

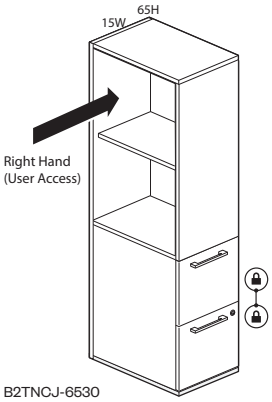

B2TNCJ-6530

Class BH – Open Market

Features

- Includes thermally fused laminate (TFL) case and drawer fronts with Box/Box/File or File/File lower storage pedestal, bookcase upper storage, finished top and glides.
- 41"(1041mm)H unit side bookcase storage is one open area. 49"(1245mm)H, 57"(1448mm)H and 65"(1651mm)H units side bookcase includes one height adjustable shelf.
- Height adjustable shelf inserts into designated mounting locations. See Product Details.
- Side bookcase handedness determined by user access from seated position.
- Drawers have full extension steel ball-bearing slides. Drawer depth is 12"(305mm).
- Pull options include Crescent, Linear, Classic, Blade and Wing.
  –Crescent, Linear and Classic pulls are brushed nickel finish.
  –Blade and Wing pull available as specifiable trim color.
- Glides provide 1"(25mm) adjustment range.
- Available locking or non-locking.
  –Box/Box/File standard with top drawer non-locking and single lock to secure bottom drawers.
  –File/File single lock secures both drawers.
- Lock plug available in black or chrome.
- Not for use with digital locks.
- For lock options, refer to Lock Program section of the Accessories Price List.

Specification Tips

- For use as freestanding storage; does not require counterweight or ganging kit. Exception: 15"(381mm)W x 18"(457mm)D units must be ganged together or attached to Compose or Compose Connections.
- 3H Modular Lower Storage will not horizontally align with 41"(1041mm)H Freestanding Storage.
- For use with separately specified:
  –Worksurface to storage bracket (ZUBW-PN) or tower to desk bracket (ABBH-SN) to support a convergent worksurface.
  –TFL accessory shelf (B2ASE)
- Not for use with:
  –Stack-on Storage
  –Personal Drawer
- File drawer accommodates side-to-side and front-to-back letter filing. File drawer does not accommodate legal filing.
- Box drawer for use with separately specified accessories:
  –Drawer Tray
  –Drawer Liner
  –Drawer Dividers
  –Organizational Rings
  –Personal Drawer
  –Pencil Tray

To Order, Specify:

1) Product number, including:

❶ **Pull Option:** (see side bar)

❷ **Lock Option:**

- **N** No Lock
- **Y** Lock (add **$43.46** list)

2) TFL color for case.
3) Front TFL color.
4) Pull color (Blade and Wing).
5) Trim color for lock plug (if applicable).

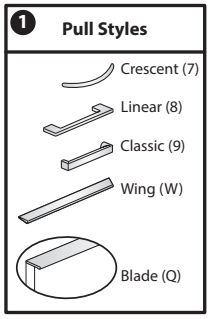

Freestanding Storage

Personal Storage Towers - 15"W

Height	Depth	Width	Pull	Number ❶❷	Case TFL A Front TFL A	Case TFL A Front TFL B	Case TFL B Front TFL A	Case TFL B Front TFL B
41"(1041mm)H - Right-Hand Bookcase								
Box/Box/File								
41"(1041mm)	18"(457mm)	15"(381mm)	7,8,9	B2TNCH-4118-TTNBP R	$ 1364.27	$ 1367.15	$1430.63	$ 1433.51
			W	B2TNCH-4118-TTNBPW R	1409.45	1412.33	1475.81	1478.69
			Q	B2TNCH-4118-TTNBPQ R	1425.89	1428.77	1492.25	1495.13
	24"(610mm)	15"(381mm)	7,8,9	B2TNCH-4124-TTNBP R	1487.51	1490.39	1644.35	1647.23
			W	B2TNCH-4124-TTNBPW R	1532.69	1535.57	1689.53	1692.41
			Q	B2TNCH-4124-TTNBPQ R	1549.13	1552.01	1705.97	1708.85
	30"(762mm)	15"(381mm)	7,8,9	B2TNCH-4130-TTNBP R	1610.75	1613.63	1858.07	1860.95
			W	B2TNCH-4130-TTNBPW R	1655.93	1658.81	1903.25	1906.13
			Q	B2TNCH-4130-TTNBPQ R	1672.37	1675.25	1919.69	1922.57
File/File								
41"(1041mm)	18"(457mm)	15"(381mm)	7,8,9	B2TNCJ-4118-TTNBP R	$ 1362.91	$ 1365.79	$ 1429.27	$ 1432.15
			W	B2TNCJ-4118-TTNBPW R	1393.03	1395.91	1459.39	1462.27
			Q	B2TNCJ-4118-TTNBPQ R	1403.99	1406.87	1470.35	1473.23
	24"(610mm)	15"(381mm)	7,8,9	B2TNCJ-4124-TTNBP R	1486.15	1489.03	1642.99	1645.87
			W	B2TNCJ-4124-TTNBPW R	1516.27	1519.15	1673.11	1675.99
			Q	B2TNCJ-4124-TTNBPQ R	1527.23	1530.11	1684.07	1686.95
	30"(762mm)	15"(381mm)	7,8,9	B2TNCJ-4130-TTNBP R	1609.39	1612.27	1856.71	1859.59
			W	B2TNCJ-4130-TTNBPW R	1639.51	1642.39	1886.83	1889.71
			Q	B2TNCJ-4130-TTNBPQ R	1650.47	1653.35	1897.79	1900.67
41"(1041mm)H - Left-Hand Bookcase								
Box/Box/File								
41"(1041mm)	18"(457mm)	15"(381mm)	7,8,9	B2TNDH-4118-TTNBP R	$ 1364.27	$ 1367.15	$1430.63	$ 1433.51
			W	B2TNDH-4118-TTNBPW R	1409.45	1412.33	1475.81	1478.69
			Q	B2TNDH-4118-TTNBPQ R	1425.89	1428.77	1492.25	1495.13
	24"(610mm)	15"(381mm)	7,8,9	B2TNDH-4124-TTNBP R	1487.51	1490.39	1644.35	1647.23
			W	B2TNDH-4124-TTNBPW R	1532.69	1535.57	1689.53	1692.41
			Q	B2TNDH-4124-TTNBPQ R	1549.13	1552.01	1705.97	1708.85
	30"(762mm)	15"(381mm)	7,8,9	B2TNDH-4130-TTNBP R	1610.75	1613.63	1858.07	1860.95
			W	B2TNDH-4130-TTNBPW R	1655.93	1658.81	1903.25	1906.13
			Q	B2TNDH-4130-TTNBPQ R	1672.37	1675.25	1919.69	1922.57
File/File								
41"(1041mm)	18"(457mm)	15"(381mm)	7,8,9	B2TNDJ-4118-TTNBP R	$ 1362.91	$ 1365.79	$ 1429.27	$ 1432.15
			W	B2TNDJ-4118-TTNBPW R	1393.03	1395.91	1459.39	1462.27
			Q	B2TNDJ-4118-TTNBPQ R	1403.99	1406.87	1470.35	1473.23
	24"(610mm)	15"(381mm)	7,8,9	B2TNDJ-4124-TTNBP R	1486.15	1489.03	1642.99	1645.87
			W	B2TNDJ-4124-TTNBPW R	1516.27	1519.15	1673.11	1675.99
			Q	B2TNDJ-4124-TTNBPQ R	1527.23	1530.11	1684.07	1686.95
	30"(762mm)	15"(381mm)	7,8,9	B2TNDJ-4130-TTNBP R	1609.39	1612.27	1856.71	1859.59
			W	B2TNDJ-4130-TTNBPW R	1639.51	1642.39	1886.83	1889.71
			Q	B2TNDJ-4130-TTNBPQ R	1650.47	1653.35	1897.79	1900.67

Freestanding Storage

Personal Storage Towers - 15"W

Height	Depth	Width	Pull	Number ❶❷	Case TFL A Front TFL A	Case TFL A Front TFL B	Case TFL B Front TFL A	Case TFL B Front TFL B
49"(1245mm)H - Right-Hand Bookcase								
Box/Box/File								
49"(1245mm)	18"(457mm)	15"(381mm)	7,8,9	B2TNCH-4918-TTNBP R	$1429.95	$1432.83	$1499.67	$1502.55
			W	B2TNCH-4918-TTNBPW R	1475.13	1478.01	1544.85	1547.73
			Q	B2TNCH-4918-TTNBPQ R	1491.57	1494.45	1561.29	1564.17
	24"(610mm)	15"(381mm)	7,8,9	B2TNCH-4924-TTNBP R	1553.19	1556.07	1713.39	1716.27
			W	B2TNCH-4924-TTNBPW R	1598.37	1601.25	1758.57	1761.45
			Q	B2TNCH-4924-TTNBPQ R	1614.81	1617.69	1775.01	1777.89
	30"(762mm)	15"(381mm)	7,8,9	B2TNCH-4930-TTNBP R	1676.43	1679.31	1927.11	1929.99
			W	B2TNCH-4930-TTNBPW R	1721.61	1724.49	1972.29	1975.17
			Q	B2TNCH-4930-TTNBPQ R	1738.05	1740.93	1988.73	1991.61
File/File								
49"(1245mm)	18"(457mm)	15"(381mm)	7,8,9	B2TNCJ-4918-TTNBP R	$1428.59	$ 1431.47	$ 1498.31	$ 1501.19
			W	B2TNCJ-4918-TTNBPW R	1458.71	1461.59	1528.43	1531.31
			Q	B2TNCJ-4918-TTNBPQ R	1469.67	1472.55	1539.39	1542.27
	24"(610mm)	15"(381mm)	7,8,9	B2TNCJ-4924-TTNBP R	1551.83	1554.71	1712.03	1714.91
			W	B2TNCJ-4924-TTNBPW R	1581.95	1584.83	1742.15	1745.03
			Q	B2TNCJ-4924-TTNBPQ R	1592.91	1595.79	1753.11	1755.99
	30"(762mm)	15"(381mm)	7,8,9	B2TNCJ-4930-TTNBP R	1675.07	1677.95	1925.75	1928.63
			W	B2TNCJ-4930-TTNBPW R	1705.19	1708.07	1955.87	1958.75
			Q	B2TNCJ-4930-TTNBPQ R	1716.15	1719.03	1966.83	1969.71
49"(1245mm)H - Left-Hand Bookcase								
Box/Box/File								
49"(1245mm)	18"(457mm)	15"(381mm)	7,8,9	B2TNDH-4918-TTNBP R	$1429.95	$1432.83	$1499.67	$1502.55
			W	B2TNDH-4918-TTNBPW R	1475.13	1478.01	1544.85	1547.73
			Q	B2TNDH-4918-TTNBPQ R	1491.57	1494.45	1561.29	1564.17
	24"(610mm)	15"(381mm)	7,8,9	B2TNDH-4924-TTNBP R	1553.19	1556.07	1713.39	1716.27
			W	B2TNDH-4924-TTNBPW R	1598.37	1601.25	1758.57	1761.45
			Q	B2TNDH-4924-TTNBPQ R	1614.81	1617.69	1775.01	1777.89
	30"(762mm)	15"(381mm)	7,8,9	B2TNDH-4930-TTNBP R	1676.43	1679.31	1927.11	1929.99
			W	B2TNDH-4930-TTNBPW R	1721.61	1724.49	1972.29	1975.17
			Q	B2TNDH-4930-TTNBPQ R	1738.05	1740.93	1988.73	1991.61
File/File								
49"(1245mm)	18"(457mm)	15"(381mm)	7,8,9	B2TNDJ-4918-TTNBP R	$1428.59	$ 1431.47	$ 1498.31	$ 1501.19
			W	B2TNDJ-4918-TTNBPW R	1458.71	1461.59	1528.43	1531.31
			Q	B2TNDJ-4918-TTNBPQ R	1469.67	1472.55	1539.39	1542.27
	24"(610mm)	15"(381mm)	7,8,9	B2TNDJ-4924-TTNBP R	1551.83	1554.71	1712.03	1714.91
			W	B2TNDJ-4924-TTNBPW R	1581.95	1584.83	1742.15	1745.03
			Q	B2TNDJ-4924-TTNBPQ R	1592.91	1595.79	1753.11	1755.99
	30"(762mm)	15"(381mm)	7,8,9	B2TNDJ-4930-TTNBP R	1675.07	1677.95	1925.75	1928.63
			W	B2TNDJ-4930-TTNBPW R	1705.19	1708.07	1955.87	1958.75
			Q	B2TNDJ-4930-TTNBPQ R	1716.15	1719.03	1966.83	1969.71

Freestanding Storage

Personal Storage Towers - 15"W

Height	Depth	Width	Pull	Number ❶❷	Case TFL A Front TFL A	Case TFL A Front TFL B	Case TFL B Front TFL A	Case TFL B Front TFL B
57"(1448mm)H - Right-Hand Bookcase								
Box/Box/File								
57"(1448mm)	18"(457mm)	15"(381mm)	7,8,9	B2TNCH-5718-TTNBP R	$1495.63	$ 1498.51	$ 1568.71	$ 1571.59
			W	B2TNCH-5718-TTNBPW R	1540.81	1543.69	1613.89	1616.77
			Q	B2TNCH-5718-TTNBPQ R	1557.25	1560.13	1630.33	1633.21
	24"(610mm)	15"(381mm)	7,8,9	B2TNCH-5724-TTNBP R	1618.87	1621.75	1782.43	1785.31
			W	B2TNCH-5724-TTNBPW R	1664.05	1666.93	1827.61	1830.49
			Q	B2TNCH-5724-TTNBPQ R	1680.49	1683.37	1844.05	1846.93
	30"(762mm)	15"(381mm)	7,8,9	B2TNCH-5730-TTNBP R	1742.11	1744.99	1996.15	1999.03
			W	B2TNCH-5730-TTNBPW R	1787.29	1790.17	2041.33	2044.21
			Q	B2TNCH-5730-TTNBPQ R	1803.73	1806.61	2057.77	2060.65
File/File								
57"(1448mm)	18"(457mm)	15"(381mm)	7,8,9	B2TNCJ-5718-TTNBP R	$1494.27	$ 1497.15	$ 1567.35	$ 1570.23
			W	B2TNCJ-5718-TTNBPW R	1524.39	1527.27	1597.47	1600.35
			Q	B2TNCJ-5718-TTNBPQ R	1535.35	1538.23	1608.43	1611.31
	24"(610mm)	15"(381mm)	7,8,9	B2TNCJ-5724-TTNBP R	1617.51	1620.39	1781.07	1783.95
			W	B2TNCJ-5724-TTNBPW R	1647.63	1650.51	1811.19	1814.07
			Q	B2TNCJ-5724-TTNBPQ R	1658.59	1661.47	1822.15	1825.03
	30"(762mm)	15"(381mm)	7,8,9	B2TNCJ-5730-TTNBP R	1740.75	1743.63	1994.79	1997.67
			W	B2TNCJ-5730-TTNBPW R	1770.87	1773.75	2024.91	2027.79
			Q	B2TNCJ-5730-TTNBPQ R	1781.83	1784.71	2035.87	2038.75
57"(1448mm)H - Left-Hand Bookcase								
Box/Box/File								
57"(1448mm)	18"(457mm)	15"(381mm)	7,8,9	B2TNDH-5718-TTNBP R	$1495.63	$ 1498.51	$ 1568.71	$ 1571.59
			W	B2TNDH-5718-TTNBPW R	1540.81	1543.69	1613.89	1616.77
			Q	B2TNDH-5718-TTNBPQ R	1557.25	1560.13	1630.33	1633.21
	24"(610mm)	15"(381mm)	7,8,9	B2TNDH-5724-TTNBP R	1618.87	1621.75	1782.43	1785.31
			W	B2TNDH-5724-TTNBPW R	1664.05	1666.93	1827.61	1830.49
			Q	B2TNDH-5724-TTNBPQ R	1680.49	1683.37	1844.05	1846.93
	30"(762mm)	15"(381mm)	7,8,9	B2TNDH-5730-TTNBP R	1742.11	1744.99	1996.15	1999.03
			W	B2TNDH-5730-TTNBPW R	1787.29	1790.17	2041.33	2044.21
			Q	B2TNDH-5730-TTNBPQ R	1803.73	1806.61	2057.77	2060.65
File/File								
57"(1448mm)	18"(457mm)	15"(381mm)	7,8,9	B2TNDJ-5718-TTNBP R	$1494.27	$ 1497.15	$ 1567.35	$ 1570.23
			W	B2TNDJ-5718-TTNBPW R	1524.39	1527.27	1597.47	1600.35
			Q	B2TNDJ-5718-TTNBPQ R	1535.35	1538.23	1608.43	1611.31
	24"(610mm)	15"(381mm)	7,8,9	B2TNDJ-5724-TTNBP R	1617.51	1620.39	1781.07	1783.95
			W	B2TNDJ-5724-TTNBPW R	1647.63	1650.51	1811.19	1814.07
			Q	B2TNDJ-5724-TTNBPQ R	1658.59	1661.47	1822.15	1825.03
	30"(762mm)	15"(381mm)	7,8,9	B2TNDJ-5730-TTNBP R	1740.75	1743.63	1994.79	1997.67
			W	B2TNDJ-5730-TTNBPW R	1770.87	1773.75	2024.91	2027.79
			Q	B2TNDJ-5730-TTNBPQ R	1781.83	1784.71	2035.87	2038.75

Freestanding Storage

Personal Storage Towers - 15"W

Height	Depth	Width	Pull	Number ❶❷	Case TFL A Front TFL A	Case TFL A Front TFL B	Case TFL B Front TFL A	Case TFL B Front TFL B
65"(1651mm)H - Right-Hand Bookcase								
Box/Box/File								
65"(1651mm)	18"(457mm)	15"(381mm)	7,8,9	B2TNCH-6518-TTNBP R	$ 1561.31	$ 1564.19	$ 1637.75	$ 1640.63
			W	B2TNCH-6518-TTNBPW R	1606.49	1609.37	1682.93	1685.81
			Q	B2TNCH-6518-TTNBPQ R	1622.93	1625.81	1699.37	1702.25
	24"(610mm)	15"(381mm)	7,8,9	B2TNCH-6524-TTNBP R	1684.55	1687.43	1851.47	1854.35
			W	B2TNCH-6524-TTNBPW R	1729.73	1732.61	1896.65	1899.53
			Q	B2TNCH-6524-TTNBPQ R	1746.17	1749.05	1913.09	1915.97
	30"(762mm)	15"(381mm)	7,8,9	B2TNCH-6530-TTNBP R	1807.79	1810.67	2065.19	2068.07
			W	B2TNCH-6530-TTNBPW R	1852.97	1855.85	2110.37	2113.25
			Q	B2TNCH-6530-TTNBPQ R	1869.41	1872.29	2126.81	2129.69
File/File								
65"(1651mm)	18"(457mm)	15"(381mm)	7,8,9	B2TNCJ-6518-TTNBP R	$1559.95	$1562.83	$ 1636.39	$ 1639.27
			W	B2TNCJ-6518-TTNBPW R	1590.07	1592.95	1666.51	1669.39
			Q	B2TNCJ-6518-TTNBPQ R	1601.03	1603.91	1677.47	1680.35
	24"(610mm)	15"(381mm)	7,8,9	B2TNCJ-6524-TTNBP R	1683.19	1686.07	1850.11	1852.99
			W	B2TNCJ-6524-TTNBPW R	1713.31	1716.19	1880.23	1883.11
			Q	B2TNCJ-6524-TTNBPQ R	1724.27	1727.15	1891.19	1894.07
	30"(762mm)	15"(381mm)	7,8,9	B2TNCJ-6530-TTNBP R	1806.43	1809.31	2063.83	2066.71
			W	B2TNCJ-6530-TTNBPW R	1836.55	1839.43	2093.95	2096.83
			Q	B2TNCJ-6530-TTNBPQ R	1847.51	1850.39	2104.91	2107.79
65"(1651mm)H - Left-Hand Bookcase								
Box/Box/File								
65"(1651mm)	18"(457mm)	15"(381mm)	7,8,9	B2TNDH-6518-TTNBP R	$ 1561.31	$ 1564.19	$ 1637.75	$ 1640.63
			W	B2TNDH-6518-TTNBPW R	1606.49	1609.37	1682.93	1685.81
			Q	B2TNDH-6518-TTNBPQ R	1622.93	1625.81	1699.37	1702.25
	24"(610mm)	15"(381mm)	7,8,9	B2TNDH-6524-TTNBP R	1684.55	1687.43	1851.47	1854.35
			W	B2TNDH-6524-TTNBPW R	1729.73	1732.61	1896.65	1899.53
			Q	B2TNDH-6524-TTNBPQ R	1746.17	1749.05	1913.09	1915.97
	30"(762mm)	15"(381mm)	7,8,9	B2TNDH-6530-TTNBP R	1807.79	1810.67	2065.19	2068.07
			W	B2TNDH-6530-TTNBPW R	1852.97	1855.85	2110.37	2113.25
			Q	B2TNDH-6530-TTNBPQ R	1869.41	1872.29	2126.81	2129.69
File/File								
65"(1651mm)	18"(457mm)	15"(381mm)	7,8,9	B2TNDJ-6518-TTNBP R	$1559.95	$1562.83	$ 1636.39	$ 1639.27
			W	B2TNDJ-6518-TTNBPW R	1590.07	1592.95	1666.51	1669.39
			Q	B2TNDJ-6518-TTNBPQ R	1601.03	1603.91	1677.47	1680.35
	24"(610mm)	15"(381mm)	7,8,9	B2TNDJ-6524-TTNBP R	1683.19	1686.07	1850.11	1852.99
			W	B2TNDJ-6524-TTNBPW R	1713.31	1716.19	1880.23	1883.11
			Q	B2TNDJ-6524-TTNBPQ R	1724.27	1727.15	1891.19	1894.07
	30"(762mm)	15"(381mm)	7,8,9	B2TNDJ-6530-TTNBP R	1806.43	1809.31	2063.83	2066.71
			W	B2TNDJ-6530-TTNBPW R	1836.55	1839.43	2093.95	2096.83
			Q	B2TNDJ-6530-TTNBPQ R	1847.51	1850.39	2104.91	2107.79

Freestanding Storage

Personal Storage Towers - 15"W

Hinged Door Upper Storage

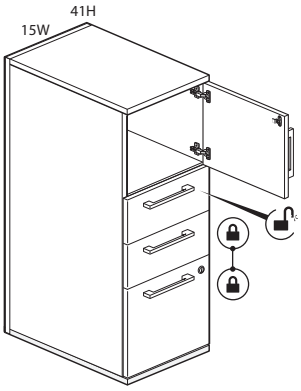

B2TNLH-4130

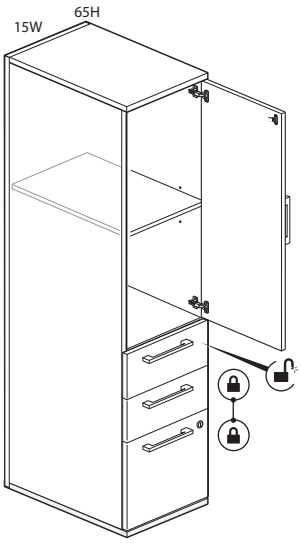

B2TNLH-6530

Class BH – Open Market

Features

- Includes thermally fused laminate (TFL) case, hinged door, and drawer fronts with Box/Box/File or File/File lower storage pedestal, finished top and glides.
- 49"(1245mm)H, 57"(1448mm)H and 65"(1651mm)H units include one height adjustable shelf; height adjustable shelf inserts into designated mounting locations. See Product Details.
- Drawers have full extension steel ball-bearing slides. Drawer depth is 12"(305mm).
- Pull options include Crescent, Linear, Classic, Blade and Wing.
  –Crescent, Linear and Classic pulls are brushed nickel finish.
  –Blade and Wing pull available as specifiable trim color. Note: When Blade pull is ordered the hinged door storage will be touch latch (no pull).
- Glides provide 1"(25mm) adjustment range.
- Available locking or non-locking.
  –Box/Box/File standard with top drawer non-locking and single lock to secure bottom drawers.
  –File/File single lock secures both drawers.
  –Hinged door upper storage locks separately.
- Lock plug available in black or chrome.
- Not for use with digital locks.
- For lock options, refer to Lock Program section of the Accessories Price List.

Specification Tips

- For use as freestanding storage; does not require counterweight or ganging kit. Exception: 15"(381mm)W x 18"(457mm)D units must be ganged together or attached to Compose or Compose Connections.
- 3H Modular Lower Storage will not horizontally align with 41"(1041mm)H Freestanding Storage.
- For use with separately specified:
  –Worksurface to storage bracket (ZUBW-PN) or tower to desk bracket (ABBH-SN) to support a convergent worksurface.
  –TFL accessory shelf (B2ASE)
- Not for use with:
  –Stack-on Storage
  –Personal Drawer
  –Accessory Shelf
- Box drawer for use with separately specified Belong accessories:
  –Drawer Tray
  –Drawer Liner
  –Drawer Dividers
  –Organizational Rings
- File drawer accommodates side-to-side and front-to-back letter filing. File drawer does not accommodate legal filing.

To Order, Specify:

1) Product number, including:

❶ **Hinged Door Handedness:**
- **A** Right Hand
- **B** Left Hand

❷ **Pull Option:** (see side bar)

❸ **Lock Option:**
- **N** No Lock
- **Y** Lock (add **$43.46** list)

2) TFL color for case.
3) Front TFL color.
4) Pull color (Blade and Wing).
5) Trim color for lock plug (if applicable).

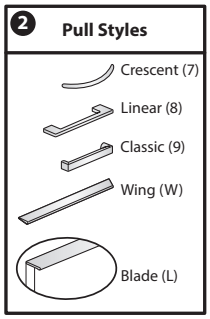

Freestanding Storage

Personal Storage Towers - 15"W

Height	Depth	Width	Pull	Number ❶	❷❸	Case TFL A Front TFL A	Case TFL A Front TFL B	Case TFL B Front TFL A	Case TFL B Front TFL B
41"(1041mm)H									
Box/Box/File									
41"(1041mm)	18"(457mm)	15"(381mm)	7,8,9	B2TN	H-4118-TTNBP R	$ 1320.14	$ 1323.02	$ 1391.54	$ 1394.42
			W	B2TN	H-4118-TTNBPW R	1380.38	1383.26	1451.78	1454.66
			L	B2TN	H-4118-TTNBPL R	1374.92	1377.80	1446.32	1449.20
	24"(610mm)	15"(381mm)	7,8,9	B2TN	H-4124-TTNBP R	1443.38	1446.26	1605.26	1608.14
			W	B2TN	H-4124-TTNBPW R	1503.62	1506.50	1665.50	1668.38
			L	B2TN	H-4124-TTNBPL R	1498.16	1501.04	1660.04	1662.92
	30"(762mm)	15"(381mm)	7,8,9	B2TN	H-4130-TTNBP R	1566.62	1569.50	1818.98	1821.86
			W	B2TN	H-4130-TTNBPW R	1626.86	1629.74	1879.22	1882.10
			L	B2TN	H-4130-TTNBPL R	1621.40	1624.28	1873.76	1876.64
File/File									
41"(1041mm)	18"(457mm)	15"(381mm)	7,8,9	B2TN	J-4118-TTNBP R	$ 1318.78	$ 1321.66	$ 1390.18	$ 1393.06
			W	B2TN	J-4118-TTNBPW R	1363.96	1366.84	1435.36	1438.24
			L	B2TN	J-4118-TTNBPL R	1353.02	1355.90	1424.42	1427.30
	24"(610mm)	15"(381mm)	7,8,9	B2TN	J-4124-TTNBP R	1442.02	1444.90	1603.90	1606.78
			W	B2TN	J-4124-TTNBPW R	1487.20	1490.08	1649.08	1651.96
			L	B2TN	J-4124-TTNBPL R	1476.26	1479.14	1638.14	1641.02
	30"(762mm)	15"(381mm)	7,8,9	B2TN	J-4130-TTNBP R	1565.26	1568.14	1817.62	1820.50
			W	B2TN	J-4130-TTNBPW R	1610.44	1613.32	1862.80	1865.68
			L	B2TN	J-4130-TTNBPL R	1599.50	1602.38	1851.86	1854.74
49"(1245mm)H									
Box/Box/File									
49"(1245mm)	18"(457mm)	15"(381mm)	7,8,9	B2TN	H-4918-TTNBP R	$ 1397.86	$ 1400.74	$ 1473.46	$ 1476.34
			W	B2TN	H-4918-TTNBPW R	1458.10	1460.98	1533.70	1536.58
			L	B2TN	H-4918-TTNBPL R	1452.64	1455.52	1528.24	1531.12
	24"(610mm)	15"(381mm)	7,8,9	B2TN	H-4924-TTNBP R	1521.10	1523.98	1687.18	1690.06
			W	B2TN	H-4924-TTNBPW R	1581.34	1584.22	1747.42	1750.30
			L	B2TN	H-4924-TTNBPL R	1575.88	1578.76	1741.96	1744.84
	30"(762mm)	15"(381mm)	7,8,9	B2TN	H-4930-TTNBP R	1644.34	1647.22	1900.90	1903.78
			W	B2TN	H-4930-TTNBPW R	1704.58	1707.46	1961.14	1964.02
			L	B2TN	H-4930-TTNBPL R	1699.12	1702.00	1955.68	1958.56
File/File									
49"(1245mm)	18"(457mm)	15"(381mm)	7,8,9	B2TN	J-4918-TTNBP R	$1396.50	$ 1399.38	$ 1472.10	$ 1474.98
			W	B2TN	J-4918-TTNBPW R	1441.68	1444.56	1517.28	1520.16
			L	B2TN	J-4918-TTNBPL R	1430.74	1433.62	1506.34	1509.22
	24"(610mm)	15"(381mm)	7,8,9	B2TN	J-4924-TTNBP R	1519.74	1522.62	1685.82	1688.70
			W	B2TN	J-4924-TTNBPW R	1564.92	1567.80	1731.00	1733.88
			L	B2TN	J-4924-TTNBPL R	1553.98	1556.86	1720.06	1722.94
	30"(762mm)	15"(381mm)	7,8,9	B2TN	J-4930-TTNBP R	1642.98	1645.86	1899.54	1902.42
			W	B2TN	J-4930-TTNBPW R	1688.16	1691.04	1944.72	1947.60
			L	B2TN	J-4930-TTNBPL R	1677.22	1680.10	1933.78	1936.66

Freestanding Storage

Personal Storage Towers - 15"W

Height	Depth	Width	Pull	Number ❶	❷❸	Case TFL A Front TFL A	Case TFL A Front TFL B	Case TFL B Front TFL A	Case TFL B Front TFL B
57"(1448mm)H									
Box/Box/File									
57"(1448mm)	18"(457mm)	15"(381mm)	7,8,9	B2TN	H-5718-TTNBP R	$ 1477.30	$ 1480.18	$ 1557.22	$ 1560.10
			W	B2TN	H-5718-TTNBPW R	1537.54	1540.42	1617.46	1620.34
			L	B2TN	H-5718-TTNBPL R	1532.08	1534.96	1612.00	1614.88
	24"(610mm)	15"(381mm)	7,8,9	B2TN	H-5724-TTNBP R	1600.54	1603.42	1770.94	1773.82
			W	B2TN	H-5724-TTNBPW R	1660.78	1663.66	1831.18	1834.06
			L	B2TN	H-5724-TTNBPL R	1655.32	1658.20	1825.72	1828.60
	30"(762mm)	15"(381mm)	7,8,9	B2TN	H-5730-TTNBP R	1723.78	1726.66	1984.66	1987.54
			W	B2TN	H-5730-TTNBPW R	1784.02	1786.90	2044.90	2047.78
			L	B2TN	H-5730-TTNBPL R	1778.56	1781.44	2039.44	2042.32
File/File									
57"(1448mm)	18"(457mm)	15"(381mm)	7,8,9	B2TN	J-5718-TTNBP R	$ 1475.94	$ 1478.82	$ 1555.86	$ 1558.74
			W	B2TN	J-5718-TTNBPW R	1521.12	1524.00	1601.04	1603.92
			L	B2TN	J-5718-TTNBPL R	1510.18	1513.06	1590.10	1592.98
	24"(610mm)	15"(381mm)	7,8,9	B2TN	J-5724-TTNBP R	1599.18	1602.06	1769.58	1772.46
			W	B2TN	J-5724-TTNBPW R	1644.36	1647.24	1814.76	1817.64
			L	B2TN	J-5724-TTNBPL R	1633.42	1636.30	1803.82	1806.70
	30"(762mm)	15"(381mm)	7,8,9	B2TN	J-5730-TTNBP R	1722.42	1725.30	1983.30	1986.18
			W	B2TN	J-5730-TTNBPW R	1767.60	1770.48	2028.48	2031.36
			L	B2TN	J-5730-TTNBPL R	1756.66	1759.54	2017.54	2020.42
65"(1651mm)H									
Box/Box/File									
65"(1651mm)	18"(457mm)	15"(381mm)	7,8,9	B2TN	H-6518-TTNBP R	$ 1556.74	$ 1559.62	$ 1640.98	$ 1643.86
			W	B2TN	H-6518-TTNBPW R	1616.98	1619.86	1701.22	1704.10
			L	B2TN	H-6518-TTNBPL R	1611.52	1614.40	1695.76	1698.64
	24"(610mm)	15"(381mm)	7,8,9	B2TN	H-6524-TTNBP R	1679.98	1682.86	1854.70	1857.58
			W	B2TN	H-6524-TTNBPW R	1740.22	1743.10	1914.94	1917.82
			L	B2TN	H-6524-TTNBPL R	1734.76	1737.64	1909.48	1912.36
	30"(762mm)	15"(381mm)	7,8,9	B2TN	H-6530-TTNBP R	1803.22	1806.10	2068.42	2071.30
			W	B2TN	H-6530-TTNBPW R	1863.46	1866.34	2128.66	2131.54
			L	B2TN	H-6530-TTNBPL R	1858.00	1860.88	2123.20	2126.08
File/File									
65"(1651mm)	18"(457mm)	15"(381mm)	7,8,9	B2TN	J-6518-TTNBP R	$ 1555.38	$ 1558.26	$ 1639.62	$ 1642.50
			W	B2TN	J-6518-TTNBPW R	1600.56	1603.44	1684.80	1687.68
			L	B2TN	J-6518-TTNBPL R	1589.62	1592.50	1673.86	1676.74
	24"(610mm)	15"(381mm)	7,8,9	B2TN	J-6524-TTNBP R	1678.62	1681.50	1853.34	1856.22
			W	B2TN	J-6524-TTNBPW R	1723.80	1726.68	1898.52	1901.40
			L	B2TN	J-6524-TTNBPL R	1712.86	1715.74	1887.58	1890.46
	30"(762mm)	15"(381mm)	7,8,9	B2TN	J-6530-TTNBP R	1801.86	1804.74	2067.06	2069.94
			W	B2TN	J-6530-TTNBPW R	1847.04	1849.92	2112.24	2115.12
			L	B2TN	J-6530-TTNBPL R	1836.10	1838.98	2101.30	2104.18

Freestanding Storage

Personal Storage Towers - 24"W

Front Bookcase Upper Storage

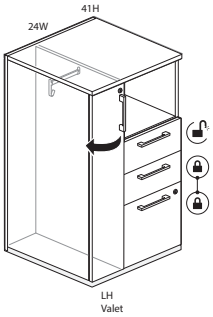

B2TLEH-4130

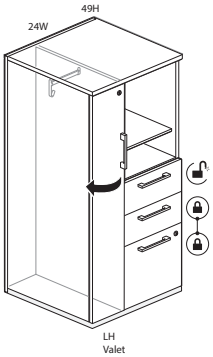

B2TLEH-4930

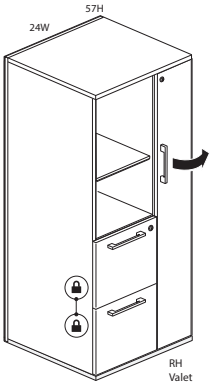

B2TREJ-5730

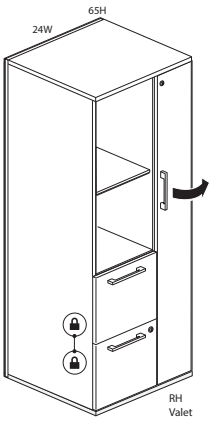

B2TREJ-6530

Class BH – Open Market

Features

- Includes thermally fused laminate (TFL) case, valet door, and drawer fronts with Box/Box/File or File/File lower storage pedestal, bookcase upper storage, left or right hand valet, concealed hinges, finished top and glides.
- Valet has one full width coat rod and one coat hook.
- 49"(1245mm)H, 57"(1448mm)H and 65"(1651mm)H units include one height adjustable shelf; height adjustable shelf inserts into designated mounting locations. See Product Details.
- Drawers have full extension steel ball-bearing slides. Drawer depth is 12"(305mm).
- Pull options include Crescent, Linear, Classic, Blade and Wing.
  –Crescent, Linear and Classic pulls are brushed nickel finish.
  –Blade and Wing pull available as specifiable trim color. Note: When Blade pull is ordered the valet door will be touch latch (no pull).
- Glides provide 1"(25mm) adjustment range.
- Available locking or non-locking.
  –Box/Box/File standard with top drawer non-locking and single lock to secure bottom drawers.
  –File/File single lock secures both drawers.
  –Valet locks separately.
- Lock plug available in black or chrome.
- Not for use with digital locks.
- For lock options, refer to Lock Program section of the Accessories Price List.

Specification Tips

- For use as freestanding storage; does not require counterweight or ganging kit.
- 3H Modular Lower Storage will not horizontally align with 41"(1041mm)H Freestanding Storage.
- Not for use with:
  –Stack-on Storage
  –Personal Drawer
- Box drawer for use with separately specified accessories:
  –Drawer Tray
  –Drawer Liner
  –Drawer Dividers
  –Organizational Rings
- File drawer accommodates side-to-side and front-to-back letter filing. File drawer does not accommodate legal filing.

To Order, Specify:

1) Product number, including:

❶ **Pull Option:** (see side bar)

❷ **Lock Option:**

N No Lock

Y Lock (add **$86.92** list)

2) TFL color for case.
3) Front TFL color.
4) Pull color (Blade and Wing).
5) Trim color for lock plug (if applicable).

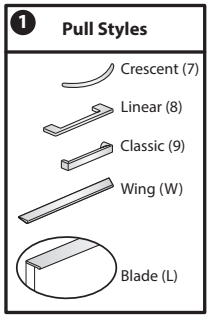

Freestanding Storage

Personal Storage Towers - 24"W

Height	Depth	Width	Pull	Number ❶❷	Case TFL A Front TFL A	Case TFL A Front TFL B	Case TFL B Front TFL A	Case TFL B Front TFL B
41"(1041mm)H - Right-Hand Valet								
Box/Box/File								
41"(1041mm)	18"(457mm)	24"(610mm)	7,8,9	B2TREH-4118-TTNBP R	$ 1672.07	$ 1680.41	$ 1738.43	$ 1746.77
			W	B2TREH-4118-TTNBPW R	1732.31	1740.65	1798.67	1807.01
			L	B2TREH-4118-TTNBPL R	1726.85	1735.19	1793.21	1801.55
	24"(610mm)	24"(610mm)	7,8,9	B2TREH-4124-TTNBP R	1795.31	1803.65	1952.15	1960.49
			W	B2TREH-4124-TTNBPW R	1855.55	1863.89	2012.39	2020.73
			L	B2TREH-4124-TTNBPL R	1850.09	1858.43	2006.93	2015.27
File/File								
41"(1041mm)	18"(457mm)	24"(610mm)	7,8,9	B2TREJ-4118-TTNBP R	$ 1670.71	$1679.05	$ 1737.07	$ 1745.41
			W	B2TREJ-4118-TTNBPW R	1715.89	1724.23	1782.25	1790.59
			L	B2TREJ-4118-TTNBPL R	1704.95	1713.29	1771.31	1779.65
	24"(610mm)	24"(610mm)	7,8,9	B2TREJ-4124-TTNBP R	1793.95	1802.29	1950.79	1959.13
			W	B2TREJ-4124-TTNBPW R	1839.13	1847.47	1995.97	2004.31
			L	B2TREJ-4124-TTNBPL R	1828.19	1836.53	1985.03	1993.37
41"(1041mm)H - Left-Hand Valet								
Box/Box/File								
41"(1041mm)	18"(457mm)	24"(610mm)	7,8,9	B2TLEH-4118-TTNBP R	$ 1672.07	$ 1680.41	$ 1738.43	$ 1746.77
			W	B2TLEH-4118-TTNBPW R	1732.31	1740.65	1798.67	1807.01
			L	B2TLEH-4118-TTNBPL R	1726.85	1735.19	1793.21	1801.55
	24"(610mm)	24"(610mm)	7,8,9	B2TLEH-4124-TTNBP R	1795.31	1803.65	1952.15	1960.49
			W	B2TLEH-4124-TTNBPW R	1855.55	1863.89	2012.39	2020.73
			L	B2TLEH-4124-TTNBPL R	1850.09	1858.43	2006.93	2015.27
File/File								
41"(1041mm)	18"(457mm)	24"(610mm)	7,8,9	B2TLEJ-4118-TTNBP R	$ 1670.71	$1679.05	$ 1737.07	$ 1745.41
			W	B2TLEJ-4118-TTNBPW R	1715.89	1724.23	1782.25	1790.59
			L	B2TLEJ-4118-TTNBPL R	1704.95	1713.29	1771.31	1779.65
	24"(610mm)	24"(610mm)	7,8,9	B2TLEJ-4124-TTNBP R	1793.95	1802.29	1950.79	1959.13
			W	B2TLEJ-4124-TTNBPW R	1839.13	1847.47	1995.97	2004.31
			L	B2TLEJ-4124-TTNBPL R	1828.19	1836.53	1985.03	1993.37
49"(1245mm)H - Right Hand Valet								
Box/Box/File								
49"(1245mm)	18"(457mm)	24"(610mm)	7,8,9	B2TREH-4918-TTNBP R	$ 1785.63	$1794.88	$ 1855.35	$ 1864.60
			W	B2TREH-4918-TTNBPW R	1845.87	1855.12	1915.59	1924.84
			L	B2TREH-4918-TTNBPL R	1840.41	1849.66	1910.13	1919.38
	24"(610mm)	24"(610mm)	7,8,9	B2TREH-4924-TTNBP R	1908.87	1918.12	2069.07	2078.32
			W	B2TREH-4924-TTNBPW R	1969.11	1978.36	2129.31	2138.56
			L	B2TREH-4924-TTNBPL R	1963.65	1972.90	2123.85	2133.10
File/File								
49"(1245mm)	18"(457mm)	24"(610mm)	7,8,9	B2TREJ-4918-TTNBP R	$ 1784.27	$ 1793.52	$ 1853.99	$ 1863.24
			W	B2TREJ-4918-TTNBPW R	1829.45	1838.70	1899.17	1908.42
			L	B2TREJ-4918-TTNBPL R	1818.51	1827.76	1888.23	1897.48
	24"(610mm)	24"(610mm)	7,8,9	B2TREJ-4924-TTNBP R	1907.51	1916.76	2067.71	2076.96
			W	B2TREJ-4924-TTNBPW R	1952.69	1961.94	2112.89	2122.14
			L	B2TREJ-4924-TTNBPL R	1941.75	1951.00	2101.95	2111.20

Freestanding Storage

Personal Storage Towers - 24"W

Height	Depth	Width	Pull	Number ❶❷	Case TFL A Front TFL A	Case TFL A Front TFL B	Case TFL B Front TFL A	Case TFL B Front TFL B
49"(1245mm)H - Left Hand Valet								
Box/Box/File								
49"(1245mm)	18"(457mm)	24"(610mm)	7,8,9	B2TLEH-4918-TTNBP R	$ 1785.63	$ 1794.88	$ 1855.35	$ 1864.60
			W	B2TLEH-4918-TTNBPW R	1845.87	1855.12	1915.59	1924.84
			L	B2TLEH-4918-TTNBPL R	1840.41	1849.66	1910.13	1919.38
	24"(610mm)	24"(610mm)	7,8,9	B2TLEH-4924-TTNBP R	1908.87	1918.12	2069.07	2078.32
			W	B2TLEH-4924-TTNBPW R	1969.11	1978.36	2129.31	2138.56
			L	B2TLEH-4924-TTNBPL R	1963.65	1972.90	2123.85	2133.10
File/File								
49"(1245mm)	18"(457mm)	24"(610mm)	7,8,9	B2TLEJ-4918-TTNBP R	$ 1784.27	$ 1793.52	$ 1853.99	$ 1863.24
			W	B2TLEJ-4918-TTNBPW R	1829.45	1838.70	1899.17	1908.42
			L	B2TLEJ-4918-TTNBPL R	1818.51	1827.76	1888.23	1897.48
	24"(610mm)	24"(610mm)	7,8,9	B2TLEJ-4924-TTNBP R	1907.51	1916.76	2067.71	2076.96
			W	B2TLEJ-4924-TTNBPW R	1952.69	1961.94	2112.89	2122.14
			L	B2TLEJ-4924-TTNBPL R	1941.75	1951.00	2101.95	2111.20
57"(1448mm)H - Right-Hand Valet								
Box/Box/File								
57"(1448mm)	18"(457mm)	24"(610mm)	7,8,9	B2TREH-5718-TTNBP R	$ 1906.03	$ 1916.32	$ 1979.11	$ 1989.40
			W	B2TREH-5718-TTNBPW R	1966.27	1976.56	2039.35	2049.64
			L	B2TREH-5718-TTNBPL R	1960.81	1971.10	2033.89	2044.18
	24"(610mm)	24"(610mm)	7,8,9	B2TREH-5724-TTNBP R	2029.27	2039.56	2192.83	2203.12
			W	B2TREH-5724-TTNBPW R	2089.51	2099.80	2253.07	2263.36
			L	B2TREH-5724-TTNBPL R	2084.05	2094.34	2247.61	2257.90
File/File								
57"(1448mm)	18"(457mm)	24"(610mm)	7,8,9	B2TREJ-5718-TTNBP R	$ 1904.67	$ 1914.96	$ 1977.75	$ 1988.04
			W	B2TREJ-5718-TTNBPW R	1949.85	1960.14	2022.93	2033.22
			L	B2TREJ-5718-TTNBPL R	1938.91	1949.20	2011.99	2022.28
	24"(610mm)	24"(610mm)	7,8,9	B2TREJ-5724-TTNBP R	2027.91	2038.20	2191.47	2201.76
			W	B2TREJ-5724-TTNBPW R	2073.09	2083.38	2236.65	2246.94
			L	B2TREJ-5724-TTNBPL R	2062.15	2072.44	2225.71	2236.00
57"(1448mm)H - Left-Hand Valet								
Box/Box/File								
57"(1448mm)	18"(457mm)	24"(610mm)	7,8,9	B2TLEH-5718-TTNBP R	$ 1906.03	$ 1916.32	$ 1979.11	$ 1989.40
			W	B2TLEH-5718-TTNBPW R	1966.27	1976.56	2039.35	2049.64
			L	B2TLEH-5718-TTNBPL R	1960.81	1971.10	2033.89	2044.18
	24"(610mm)	24"(610mm)	7,8,9	B2TLEH-5724-TTNBP R	2029.27	2039.56	2192.83	2203.12
			W	B2TLEH-5724-TTNBPW R	2089.51	2099.80	2253.07	2263.36
			L	B2TLEH-5724-TTNBPL R	2084.05	2094.34	2247.61	2257.90
File/File								
57"(1448mm)	18"(457mm)	24"(610mm)	7,8,9	B2TLEJ-5718-TTNBP R	$ 1904.67	$ 1914.96	$ 1977.75	$ 1988.04
			W	B2TLEJ-5718-TTNBPW R	1949.85	1960.14	2022.93	2033.22
			L	B2TLEJ-5718-TTNBPL R	1938.91	1949.20	2011.99	2022.28
	24"(610mm)	24"(610mm)	7,8,9	B2TLEJ-5724-TTNBP R	2027.91	2038.20	2191.47	2201.76
			W	B2TLEJ-5724-TTNBPW R	2073.09	2083.38	2236.65	2246.94
			L	B2TLEJ-5724-TTNBPL R	2062.15	2072.44	2225.71	2236.00

Freestanding Storage

Personal Storage Towers - 24"W

Height	Depth	Width	Pull	Number ❶❷	Case TFL A Front TFL A	Case TFL A Front TFL B	Case TFL B Front TFL A	Case TFL B Front TFL B
65"(1651mm)H - Right-Hand Valet								
Box/Box/File								
65"(1651mm)	18"(457mm)	24"(610mm)	7,8,9	B2TREH-6518-TTNBP R	$2026.43	$ 2037.76	$ 2102.87	$ 2114.20
			W	B2TREH-6518-TTNBPW R	2086.67	2098.00	2163.11	2174.44
			L	B2TREH-6518-TTNBPL R	2081.21	2092.54	2157.65	2168.98
	24"(610mm)	24"(610mm)	7,8,9	B2TREH-6524-TTNBP R	2149.67	2161.00	2316.59	2327.92
			W	B2TREH-6524-TTNBPW R	2209.91	2221.24	2376.83	2388.16
			L	B2TREH-6524-TTNBPL R	2204.45	2215.78	2371.37	2382.70
File/File								
65"(1651mm)	18"(457mm)	24"(610mm)	7,8,9	B2TREJ-6518-TTNBP R	$2025.07	$2036.40	$ 2101.51	$ 2112.84
			W	B2TREJ-6518-TTNBPW R	2070.25	2081.58	2146.69	2158.02
			L	B2TREJ-6518-TTNBPL R	2059.31	2070.64	2135.75	2147.08
	24"(610mm)	24"(610mm)	7,8,9	B2TREJ-6524-TTNBP R	2148.31	2159.64	2315.23	2326.56
			W	B2TREJ-6524-TTNBPW R	2193.49	2204.82	2360.41	2371.74
			L	B2TREJ-6524-TTNBPL R	2182.55	2193.88	2349.47	2360.80
65"(1651mm)H - Left-Hand Valet								
Box/Box/File								
65"(1651mm)	18"(457mm)	24"(610mm)	7,8,9	B2TLEH-6518-TTNBP R	$2026.43	$ 2037.76	$ 2102.87	$ 2114.20
			W	B2TLEH-6518-TTNBPW R	2086.67	2098.00	2163.11	2174.44
			L	B2TLEH-6518-TTNBPL R	2081.21	2092.54	2157.65	2168.98
	24"(610mm)	24"(610mm)	7,8,9	B2TLEH-6524-TTNBP R	2149.67	2161.00	2316.59	2327.92
			W	B2TLEH-6524-TTNBPW R	2209.91	2221.24	2376.83	2388.16
			L	B2TLEH-6524-TTNBPL R	2204.45	2215.78	2371.37	2382.70
File/File								
65"(1651mm)	18"(457mm)	24"(610mm)	7,8,9	B2TLEJ-6518-TTNBP R	$2025.07	$2036.40	$ 2101.51	$ 2112.84
			W	B2TLEJ-6518-TTNBPW R	2070.25	2081.58	2146.69	2158.02
			L	B2TLEJ-6518-TTNBPL R	2059.31	2070.64	2135.75	2147.08
	24"(610mm)	24"(610mm)	7,8,9	B2TLEJ-6524-TTNBP R	2148.31	2159.64	2315.23	2326.56
			W	B2TLEJ-6524-TTNBPW R	2193.49	2204.82	2360.41	2371.74
			L	B2TLEJ-6524-TTNBPL R	2182.55	2193.88	2349.47	2360.80

Freestanding Storage

Personal Storage Towers - 24"W

Side Bookcase Upper Storage

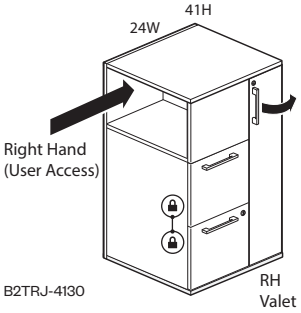

B2TRJ-4130

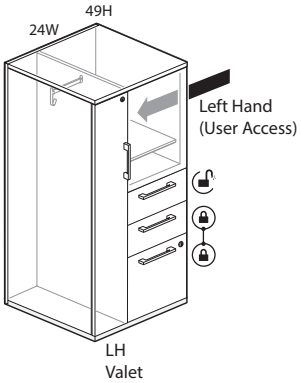

B2TLH-4930

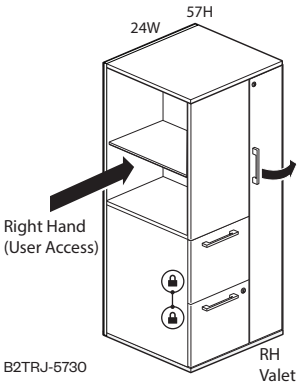

B2TRJ-5730

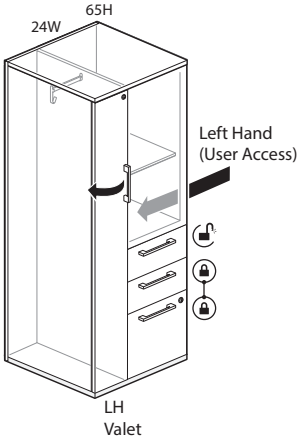

B2TLH-6530

Class BH – Open Market

Features

- Includes thermally fused laminate (TFL) case, valet door, and drawer fronts with Box/Box/File or File/File lower storage pedestal, bookcase upper storage, left or right hand valet, concealed hinges, finished top and glides.
- Valet has one full width coat rod and one coat hook.
- 49"(1245mm)H, 57"(1448mm)H and 65"(1651mm)H units include one height adjustable shelf; height adjustable shelf inserts into designated mounting locations. See Product Details.
- Drawers have full extension steel ball-bearing slides. Drawer depth is 12"(305mm).
- Pull options include Crescent, Linear, Classic, Blade and Wing.
  –Crescent, Linear and Classic pulls are brushed nickel finish.
  –Blade and Wing pull available as specifiable trim color. Note: When Blade pull is ordered the valet door will be touch latch (no pull).
- Glides provide 1"(25mm) adjustment range.
- Available locking or non-locking.
  –Box/Box/File standard with top drawer non-locking and single lock to secure bottom drawers.
  –File/File single lock secures both drawers.
  –Valet locks separately.
- Lock plug available in black or chrome.
- Not for use with digital locks.
- For lock options, refer to Lock Program section of the Accessories Price List.

Specification Tips

- For use as freestanding storage; does not require counterweight or ganging kit.
- 3H Modular Lower Storage will not horizontally align with 41"(1041mm)H Freestanding Storage.
- Side bookcase bottom shelf designed to align with standard height worksurface.
- For use with separately specified:
  –Worksurface to storage bracket (ZUBW-PN) or tower to desk bracket (ABBH-SN) to support a convergent worksurface.
  –TFL accessory shelf (B2ASE)
- Not for use with:
  –Stack-on Storage
  –Personal Drawer
- Box drawer for use with separately specified accessories:
  –Drawer Tray
  –Drawer Liner
  –Drawer Dividers
  –Organizational Rings
  –Personal Tray
  –Pencil Tray
- File drawer accommodates side-to-side and front-to-back letter filing. File drawer does not accommodate legal filing.

To Order, Specify:

1) Product number, including:

❶ **Pull Option:** (see side bar)

❷ **Lock Option:**

- **N** No Lock
- **Y** Lock (add **$86.92** list)

2) TFL color for case.
3) Front TFL color.
4) Pull color (Blade and Wing).
5) Trim color for lock plug (if applicable).

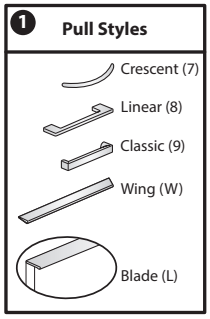

Freestanding Storage

Personal Storage Towers - 24"W

Height	Depth	Width	Pull	Number ❶❷	Case TFL A Front TFL A	Case TFL A Front TFL B	Case TFL B Front TFL A	Case TFL B Front TFL B
41"(1041mm)H - Right-Hand Valet								
Box/Box/File								
41"(1041mm)	18"(457mm)	24"(610mm)	7,8,9	B2TRCH-4118-TTNBP R	$ 1808.98	$ 1817.32	$ 1875.34	$ 1883.68
			W	B2TRCH-4118-TTNBPW R	1869.22	1877.56	1935.58	1943.92
			L	B2TRCH-4118-TTNBPL R	1863.76	1872.10	1930.12	1938.46
	24"(610mm)	24"(610mm)	7,8,9	B2TRCH-4124-TTNBP R	1932.22	1940.56	2089.06	2097.40
			W	B2TRCH-4124-TTNBPW R	1992.46	2000.80	2149.30	2157.64
			L	B2TRCH-4124-TTNBPL R	1987.00	1995.34	2143.84	2152.18
File/File								
41"(1041mm)	18"(457mm)	24"(610mm)	7,8,9	B2TRCJ-4118-TTNBP R	$ 1807.62	$ 1815.96	$ 1873.98	$ 1882.32
			W	B2TRCJ-4118-TTNBPW R	1852.80	1861.14	1919.16	1927.50
			L	B2TRCJ-4118-TTNBPL R	1841.86	1850.20	1908.22	1916.56
	24"(610mm)	24"(610mm)	7,8,9	B2TRCJ-4124-TTNBP R	1930.86	1939.20	2087.70	2096.04
			W	B2TRCJ-4124-TTNBPW R	1976.04	1984.38	2132.88	2141.22
			L	B2TRCJ-4124-TTNBPL R	1965.10	1973.44	2121.94	2130.28
41"(1041mm)H - Left-Hand Valet								
Box/Box/File								
41"(1041mm)	18"(457mm)	24"(610mm)	7,8,9	B2TLDH-4118-TTNBP R	$ 1808.98	$ 1817.32	$ 1875.34	$ 1883.68
			W	B2TLDH-4118-TTNBPW R	1869.22	1877.56	1935.58	1943.92
			L	B2TLDH-4118-TTNBPL R	1863.76	1872.10	1930.12	1938.46
	24"(610mm)	24"(610mm)	7,8,9	B2TLDH-4124-TTNBP R	1932.22	1940.56	2089.06	2097.40
			W	B2TLDH-4124-TTNBPW R	1992.46	2000.80	2149.30	2157.64
			L	B2TLDH-4124-TTNBPL R	1987.00	1995.34	2143.84	2152.18
File/File								
41"(1041mm)	18"(457mm)	24"(610mm)	7,8,9	B2TLDJ-4118-TTNBP R	$ 1807.62	$ 1815.96	$ 1873.98	$ 1882.32
			W	B2TLDJ-4118-TTNBPW R	1852.80	1861.14	1919.16	1927.50
			L	B2TLDJ-4118-TTNBPL R	1841.86	1850.20	1908.22	1916.56
	24"(610mm)	24"(610mm)	7,8,9	B2TLDJ-4124-TTNBP R	1930.86	1939.20	2087.70	2096.04
			W	B2TLDJ-4124-TTNBPW R	1976.04	1984.38	2132.88	2141.22
			L	B2TLDJ-4124-TTNBPL R	1965.10	1973.44	2121.94	2130.28
49"(1245mm)H - Right Hand Valet								
Box/Box/File								
49"(1245mm)	18"(457mm)	24"(610mm)	7,8,9	B2TRCH-4918-TTNBP R	$ 1922.54	$ 1931.79	$ 1992.26	$ 2001.51
			W	B2TRCH-4918-TTNBPW R	1982.78	1992.03	2052.50	2061.75
			L	B2TRCH-4918-TTNBPL R	1977.32	1986.57	2047.04	2056.29
	24"(610mm)	24"(610mm)	7,8,9	B2TRCH-4924-TTNBP R	2045.78	2055.03	2205.98	2215.23
			W	B2TRCH-4924-TTNBPW R	2106.02	2115.27	2266.22	2275.47
			L	B2TRCH-4924-TTNBPL R	2100.56	2109.81	2260.76	2270.01
File/File								
49"(1245mm)	18"(457mm)	24"(610mm)	7,8,9	B2TRCJ-4918-TTNBP R	$ 1921.18	$ 1930.43	$ 1990.90	$ 2000.15
			W	B2TRCJ-4918-TTNBPW R	1966.36	1975.61	2036.08	2045.33
			L	B2TRCJ-4918-TTNBPL R	1955.42	1964.67	2025.14	2034.39
	24"(610mm)	24"(610mm)	7,8,9	B2TRCJ-4924-TTNBP R	2044.42	2053.67	2204.62	2213.87
			W	B2TRCJ-4924-TTNBPW R	2089.60	2098.85	2249.80	2259.05
			L	B2TRCJ-4924-TTNBPL R	2078.66	2087.91	2238.86	2248.11

Freestanding Storage

Personal Storage Towers - 24"W

Height	Depth	Width	Pull	Number ❶❷	Case TFL A Front TFL A	Case TFL A Front TFL B	Case TFL B Front TFL A	Case TFL B Front TFL B
49"(1245mm)H - Left Hand Valet								
Box/Box/File								
49"(1245mm)	18"(457mm)	24"(610mm)	7,8,9	B2TLDH-4918-TTNBP R	$ 1922.54	$ 1931.79	$ 1992.26	$ 2001.51
			W	B2TLDH-4918-TTNBPW R	1982.78	1992.03	2052.50	2061.75
			L	B2TLDH-4918-TTNBPL R	1977.32	1986.57	2047.04	2056.29
	24"(610mm)	24"(610mm)	7,8,9	B2TLDH-4924-TTNBP R	2045.78	2055.03	2205.98	2215.23
			W	B2TLDH-4924-TTNBPW R	2106.02	2115.27	2266.22	2275.47
			L	B2TLDH-4924-TTNBPL R	2100.56	2109.81	2260.76	2270.01
File/File								
49"(1245mm)	18"(457mm)	24"(610mm)	7,8,9	B2TLDJ-4918-TTNBP R	$ 1921.18	$ 1930.43	$ 1990.90	$ 2000.15
			W	B2TLDJ-4918-TTNBPW R	1966.36	1975.61	2036.08	2045.33
			L	B2TLDJ-4918-TTNBPL R	1955.42	1964.67	2025.14	2034.39
	24"(610mm)	24"(610mm)	7,8,9	B2TLDJ-4924-TTNBP R	2044.42	2053.67	2204.62	2213.87
			W	B2TLDJ-4924-TTNBPW R	2089.60	2098.85	2249.80	2259.05
			L	B2TLDJ-4924-TTNBPL R	2078.66	2087.91	2238.86	2248.11
57"(1448mm)H - Right-Hand Valet								
Box/Box/File								
57"(1448mm)	18"(457mm)	24"(610mm)	7,8,9	B2TRCH-5718-TTNBP R	$2042.94	$2053.23	$ 2116.02	$ 2126.31
			W	B2TRCH-5718-TTNBPW R	2103.18	2113.47	2176.26	2186.55
			L	B2TRCH-5718-TTNBPL R	2097.72	2108.01	2170.80	2181.09
	24"(610mm)	24"(610mm)	7,8,9	B2TRCH-5724-TTNBP R	2166.18	2176.47	2329.74	2340.03
			W	B2TRCH-5724-TTNBPW R	2226.42	2236.71	2389.98	2400.27
			L	B2TRCH-5724-TTNBPL R	2220.96	2231.25	2384.52	2394.81
File/File								
57"(1448mm)	18"(457mm)	24"(610mm)	7,8,9	B2TRCJ-5718-TTNBP R	$ 2041.58	$ 2051.87	$ 2114.66	$ 2124.95
			W	B2TRCJ-5718-TTNBPW R	2086.76	2097.05	2159.84	2170.13
			L	B2TRCJ-5718-TTNBPL R	2075.82	2086.11	2148.90	2159.19
	24"(610mm)	24"(610mm)	7,8,9	B2TRCJ-5724-TTNBP R	2164.82	2175.11	2328.38	2338.67
			W	B2TRCJ-5724-TTNBPW R	2210.00	2220.29	2373.56	2383.85
			L	B2TRCJ-5724-TTNBPL R	2199.06	2209.35	2362.62	2372.91
57"(1448mm)H - Left-Hand Valet								
Box/Box/File								
57"(1448mm)	18"(457mm)	24"(610mm)	7,8,9	B2TLDH-5718-TTNBP R	$2042.94	$2053.23	$ 2116.02	$ 2126.31
			W	B2TLDH-5718-TTNBPW R	2103.18	2113.47	2176.26	2186.55
			L	B2TLDH-5718-TTNBPL R	2097.72	2108.01	2170.80	2181.09
	24"(610mm)	24"(610mm)	7,8,9	B2TLDH-5724-TTNBP R	2166.18	2176.47	2329.74	2340.03
			W	B2TLDH-5724-TTNBPW R	2226.42	2236.71	2389.98	2400.27
			L	B2TLDH-5724-TTNBPL R	2220.96	2231.25	2384.52	2394.81
File/File								
57"(1448mm)	18"(457mm)	24"(610mm)	7,8,9	B2TLDJ-5718-TTNBP R	$ 2041.58	$ 2051.87	$ 2114.66	$ 2124.95
			W	B2TLDJ-5718-TTNBPW R	2086.76	2097.05	2159.84	2170.13
			L	B2TLDJ-5718-TTNBPL R	2075.82	2086.11	2148.90	2159.19
	24"(610mm)	24"(610mm)	7,8,9	B2TLDJ-5724-TTNBP R	2164.82	2175.11	2328.38	2338.67
			W	B2TLDJ-5724-TTNBPW R	2210.00	2220.29	2373.56	2383.85
			L	B2TLDJ-5724-TTNBPL R	2199.06	2209.35	2362.62	2372.91

Freestanding Storage

Personal Storage Towers - 24"W

Height	Depth	Width	Pull	Number ❶❷	Case TFL A Front TFL A	Case TFL A Front TFL B	Case TFL B Front TFL A	Case TFL B Front TFL B
65"(1651mm)H - Right-Hand Valet								
Box/Box/File								
65"(1651mm)	18"(457mm)	24"(610mm)	7,8,9	B2TRCH-6518-TTNBP R	$ 2163.34	$ 2174.67	$ 2239.78	$ 2251.11
			W	B2TRCH-6518-TTNBPW R	2223.58	2234.91	2300.02	2311.35
			L	B2TRCH-6518-TTNBPL R	2218.12	2229.45	2294.56	2305.89
	24"(610mm)	24"(610mm)	7,8,9	B2TRCH-6524-TTNBP R	2286.58	2297.91	2453.50	2464.83
			W	B2TRCH-6524-TTNBPW R	2346.82	2358.15	2513.74	2525.07
			L	B2TRCH-6524-TTNBPL R	2341.36	2352.69	2508.28	2519.61
File/File								
65"(1651mm)	18"(457mm)	24"(610mm)	7,8,9	B2TRCJ-6518-TTNBP R	$ 2161.98	$ 2173.31	$ 2238.42	$ 2249.75
			W	B2TRCJ-6518-TTNBPW R	2207.16	2218.49	2283.60	2294.93
			L	B2TRCJ-6518-TTNBPL R	2196.22	2207.55	2272.66	2283.99
	24"(610mm)	24"(610mm)	7,8,9	B2TRCJ-6524-TTNBP R	2285.22	2296.55	2452.14	2463.47
			W	B2TRCJ-6524-TTNBPW R	2330.40	2341.73	2497.32	2508.65
			L	B2TRCJ-6524-TTNBPL R	2319.46	2330.79	2486.38	2497.71
65"(1651mm)H - Left-Hand Valet								
Box/Box/File								
65"(1651mm)	18"(457mm)	24"(610mm)	7,8,9	B2TLDH-6518-TTNBP R	$ 2163.34	$ 2174.67	$ 2239.78	$ 2251.11
			W	B2TLDH-6518-TTNBPW R	2223.58	2234.91	2300.02	2311.35
			L	B2TLDH-6518-TTNBPL R	2218.12	2229.45	2294.56	2305.89
	24"(610mm)	24"(610mm)	7,8,9	B2TLDH-6524-TTNBP R	2286.58	2297.91	2453.50	2464.83
			W	B2TLDH-6524-TTNBPW R	2346.82	2358.15	2513.74	2525.07
			L	B2TLDH-6524-TTNBPL R	2341.36	2352.69	2508.28	2519.61
File/File								
65"(1651mm)	18"(457mm)	24"(610mm)	7,8,9	B2TLDJ-6518-TTNBP R	$ 2161.98	$ 2173.31	$ 2238.42	$ 2249.75
			W	B2TLDJ-6518-TTNBPW R	2207.16	2218.49	2283.60	2294.93
			L	B2TLDJ-6518-TTNBPL R	2196.22	2207.55	2272.66	2283.99
	24"(610mm)	24"(610mm)	7,8,9	B2TLDJ-6524-TTNBP R	2285.22	2296.55	2452.14	2463.47
			W	B2TLDJ-6524-TTNBPW R	2330.40	2341.73	2497.32	2508.65
			L	B2TLDJ-6524-TTNBPL R	2319.46	2330.79	2486.38	2497.71

Freestanding Storage

Personal Storage Towers - 24"W

Hinged Door Upper Storage

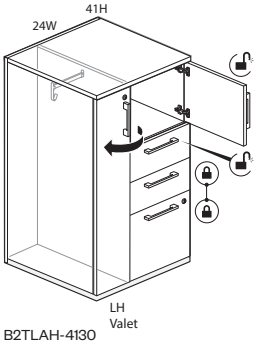

B2TLAH-4130

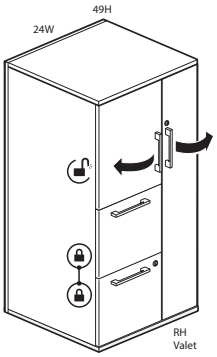

B2TRBH-4930

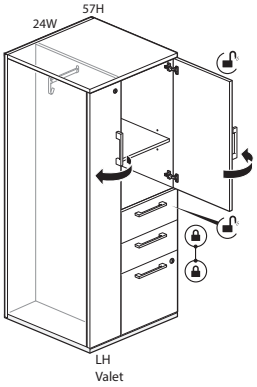

B2TLAH-5730

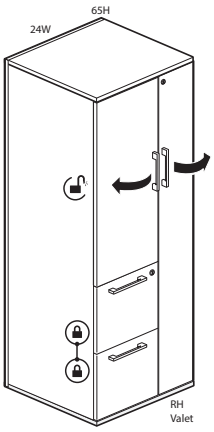

B2TRBH-6530

Class BH – Open Market

Features

- Includes thermally fused laminate (TFL) case, valet door, and drawer fronts with Box/Box/File or File/File lower storage pedestal, hinged door upper storage, left or right hand valet, concealed hinges, finished top and glides.
- Valet has one full width coat rod and one coat hook.
- 49"(1245mm)H, 57"(1448mm)H and 65"(1651mm)H units include one height adjustable shelf; height adjustable shelf inserts into designated mounting locations. See Product Details.
- Drawers have full extension steel ball-bearing slides. Drawer depth is 12"(305mm).
- Pull options include Crescent, Linear, Classic, Blade and Wing.
  –Crescent, Linear and Classic pulls are brushed nickel finish.
  –Blade and Wing pull available as specifiable trim color.
  Note: When Wing pull is ordered, the valet door will have a Wing pull and the hinged door will have a touch latch. When Blade pull is ordered both doors will be touch latch.
- Glides provide 1"(25mm) adjustment range.
- Available locking or non-locking.
  –Box/Box/File standard with top drawer non-locking and single lock to secure bottom drawers.
  –File/File single lock secures both drawers.
  –Valet door locks separately.
  –Hinged door uppper storage does not lock.
- Lock plug available in black or chrome.
- Not for use with digital locks.
- For lock options, refer to Lock Program section of the Accessories Price List.

Specification Tips

- For use as freestanding storage; does not require counterweight or ganging kit.
- 3H Modular Lower Storage will not horizontally align with 41"(1041mm)H Freestanding Storage.
- For use with separately specified:
  –Worksurface to storage bracket (ZUBW-PN) or tower to desk bracket (ABBH-SN) to support a convergent worksurface.
  –TFL accessory shelf (B2ASE)
- Not for use with:
  –Stack-on Storage
  –Personal Drawer
- Box drawer for use with separately specified accessories:
  –Drawer Tray
  –Drawer Liner
  –Drawer Dividers
  –Organizational Rings
  –Personal Tray
  –Pencil Tray
- File drawer accommodates side-to-side and front-to-back letter filing. File drawer does not accommodate legal filing.

To Order, Specify:

1) Product number, including:

❶ **Pull Option:** (see side bar)

❷ **Lock Option:**

N No Lock

Y Lock (add **$86.92** list)

2) TFL color for case.
3) Front TFL color.
4) Pull color (Blade and Wing).
5) Trim color for lock plug (if applicable).

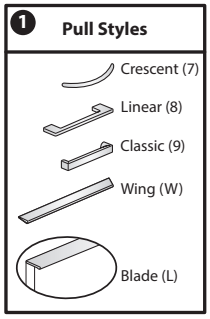

Freestanding Storage

Personal Storage Towers - 24"W

Height	Depth	Width	Pull	Number ❶❷	Case TFL A Front TFL A	Case TFL A Front TFL B	Case TFL B Front TFL A	Case TFL B Front TFL B
41"(1041mm)H - Right-Hand Valet								
Box/Box/File								
41"(1041mm)	18"(457mm)	24"(610mm)	7,8,9	B2TRBH-4118-TTNBP R	$ 1764.85	$ 1773.19	$ 1836.25	$ 1844.59
			W	B2TRBH-4118-TTNBPW R	1840.15	1848.49	1911.55	1919.89
			L	B2TRBH-4118-TTNBPL R	1812.79	1821.13	1884.19	1892.53
	24"(610mm)	24"(610mm)	7,8,9	B2TRBH-4124-TTNBP R	1888.09	1896.43	2049.97	2058.31
			W	B2TRBH-4124-TTNBPW R	1963.39	1971.73	2125.27	2133.61
			L	B2TRBH-4124-TTNBPL R	1936.03	1944.37	2097.91	2106.25
File/File								
41"(1041mm)	18"(457mm)	24"(610mm)	7,8,9	B2TRBJ-4118-TTNBP R	$ 1763.49	$ 1771.83	$ 1834.89	$ 1843.23
			W	B2TRBJ-4118-TTNBPW R	1823.73	1832.07	1895.13	1903.47
			L	B2TRBJ-4118-TTNBPL R	1790.89	1799.23	1862.29	1870.63
	24"(610mm)	24"(610mm)	7,8,9	B2TRBJ-4124-TTNBP R	1886.73	1895.07	2048.61	2056.95
			W	B2TRBJ-4124-TTNBPW R	1946.97	1955.31	2108.85	2117.19
			L	B2TRBJ-4124-TTNBPL R	1914.13	1922.47	2076.01	2084.35
41"(1041mm)H - Left-Hand Valet								
Box/Box/File								
41"(1041mm)	18"(457mm)	24"(610mm)	7,8,9	B2TLAH-4118-TTNBP R	$ 1764.85	$ 1773.19	$ 1836.25	$ 1844.59
			W	B2TLAH-4118-TTNBPW R	1840.15	1848.49	1911.55	1919.89
			L	B2TLAH-4118-TTNBPL R	1812.79	1821.13	1884.19	1892.53
	24"(610mm)	24"(610mm)	7,8,9	B2TLAH-4124-TTNBP R	1888.09	1896.43	2049.97	2058.31
			W	B2TLAH-4124-TTNBPW R	1963.39	1971.73	2125.27	2133.61
			L	B2TLAH-4124-TTNBPL R	1936.03	1944.37	2097.91	2106.25
File/File								
41"(1041mm)	18"(457mm)	24"(610mm)	7,8,9	B2TLAJ-4118-TTNBP R	$ 1763.49	$ 1771.83	$ 1834.89	$ 1843.23
			W	B2TLAJ-4118-TTNBPW R	1823.73	1832.07	1895.13	1903.47
			L	B2TLAJ-4118-TTNBPL R	1790.89	1799.23	1862.29	1870.63
	24"(610mm)	24"(610mm)	7,8,9	B2TLAJ-4124-TTNBP R	1886.73	1895.07	2048.61	2056.95
			W	B2TLAJ-4124-TTNBPW R	1946.97	1955.31	2108.85	2117.19
			L	B2TLAJ-4124-TTNBPL R	1914.13	1922.47	2076.01	2084.35
49"(1245mm)H - Right Hand Valet								
Box/Box/File								
49"(1245mm)	18"(457mm)	24"(610mm)	7,8,9	B2TRBH-4918-TTNBP R	$ 1890.45	$ 1899.70	$ 1966.05	$ 1975.30
			W	B2TRBH-4918-TTNBPW R	1965.75	1975.00	2041.35	2050.60
			L	B2TRBH-4918-TTNBPL R	1938.39	1947.64	2013.99	2023.24
	24"(610mm)	24"(610mm)	7,8,9	B2TRBH-4924-TTNBP R	2013.69	2022.94	2179.77	2189.02
			W	B2TRBH-4924-TTNBPW R	2088.99	2098.24	2255.07	2264.32
			L	B2TRBH-4924-TTNBPL R	2061.63	2070.88	2227.71	2236.96
File/File								
49"(1245mm)	18"(457mm)	24"(610mm)	7,8,9	B2TRBJ-4918-TTNBP R	$ 1889.09	$ 1898.34	$ 1964.69	$ 1973.94
			W	B2TRBJ-4918-TTNBPW R	1949.33	1958.58	2024.93	2034.18
			L	B2TRBJ-4918-TTNBPL R	1916.49	1925.74	1992.09	2001.34
	24"(610mm)	24"(610mm)	7,8,9	B2TRBJ-4924-TTNBP R	2012.33	2021.58	2178.41	2187.66
			W	B2TRBJ-4924-TTNBPW R	2072.57	2081.82	2238.65	2247.90
			L	B2TRBJ-4924-TTNBPL R	2039.73	2048.98	2205.81	2215.06

Freestanding Storage

Personal Storage Towers - 24"W

Height	Depth	Width	Pull	Number ❶❷	Case TFL A Front TFL A	Case TFL A Front TFL B	Case TFL B Front TFL A	Case TFL B Front TFL B
49"(1245mm)H - Left Hand Valet								
Box/Box/File								
49"(1245mm)	18"(457mm)	24"(610mm)	7,8,9	B2TLAH-4918-TTNBP R	$ 1890.45	$ 1899.70	$ 1966.05	$ 1975.30
			W	B2TLAH-4918-TTNBPW R	1965.75	1975.00	2041.35	2050.60
			L	B2TLAH-4918-TTNBPL R	1938.39	1947.64	2013.99	2023.24
	24"(610mm)	24"(610mm)	7,8,9	B2TLAH-4924-TTNBP R	2013.69	2022.94	2179.77	2189.02
			W	B2TLAH-4924-TTNBPW R	2088.99	2098.24	2255.07	2264.32
			L	B2TLAH-4924-TTNBPL R	2061.63	2070.88	2227.71	2236.96
File/File								
49"(1245mm)	18"(457mm)	24"(610mm)	7,8,9	B2TLAJ-4918-TTNBP R	$ 1889.09	$ 1898.34	$ 1964.69	$ 1973.94
			W	B2TLAJ-4918-TTNBPW R	1949.33	1958.58	2024.93	2034.18
			L	B2TLAJ-4918-TTNBPL R	1916.49	1925.74	1992.09	2001.34
	24"(610mm)	24"(610mm)	7,8,9	B2TLAJ-4924-TTNBP R	2012.33	2021.58	2178.41	2187.66
			W	B2TLAJ-4924-TTNBPW R	2072.57	2081.82	2238.65	2247.90
			L	B2TLAJ-4924-TTNBPL R	2039.73	2048.98	2205.81	2215.06
57"(1448mm)H - Right-Hand Valet								
Box/Box/File								
57"(1448mm)	18"(457mm)	24"(610mm)	7,8,9	B2TRBH-5718-TTNBP R	$ 2024.61	$2034.90	$ 2104.53	$ 2114.82
			W	B2TRBH-5718-TTNBPW R	2099.91	2110.20	2179.83	2190.12
			L	B2TRBH-5718-TTNBPL R	2072.55	2082.84	2152.47	2162.76
	24"(610mm)	24"(610mm)	7,8,9	B2TRBH-5724-TTNBP R	2147.85	2158.14	2318.25	2328.54
			W	B2TRBH-5724-TTNBPW R	2223.15	2233.44	2393.55	2403.84
			L	B2TRBH-5724-TTNBPL R	2195.79	2206.08	2366.19	2376.48
File/File								
57"(1448mm)	18"(457mm)	24"(610mm)	7,8,9	B2TRBJ-5718-TTNBP R	$2023.25	$2033.54	$ 2103.17	$ 2113.46
			W	B2TRBJ-5718-TTNBPW R	2083.49	2093.78	2163.41	2173.70
			L	B2TRBJ-5718-TTNBPL R	2050.65	2060.94	2130.57	2140.86
	24"(610mm)	24"(610mm)	7,8,9	B2TRBJ-5724-TTNBP R	2146.49	2156.78	2316.89	2327.18
			W	B2TRBJ-5724-TTNBPW R	2206.73	2217.02	2377.13	2387.42
			L	B2TRBJ-5724-TTNBPL R	2173.89	2184.18	2344.29	2354.58
57"(1448mm)H - Left-Hand Valet								
Box/Box/File								
57"(1448mm)	18"(457mm)	24"(610mm)	7,8,9	B2TLAH-5718-TTNBP R	$ 2024.61	$2034.90	$ 2104.53	$ 2114.82
			W	B2TLAH-5718-TTNBPW R	2099.91	2110.20	2179.83	2190.12
			L	B2TLAH-5718-TTNBPL R	2072.55	2082.84	2152.47	2162.76
	24"(610mm)	24"(610mm)	7,8,9	B2TLAH-5724-TTNBP R	2147.85	2158.14	2318.25	2328.54
			W	B2TLAH-5724-TTNBPW R	2223.15	2233.44	2393.55	2403.84
			L	B2TLAH-5724-TTNBPL R	2195.79	2206.08	2366.19	2376.48
File/File								
57"(1448mm)	18"(457mm)	24"(610mm)	7,8,9	B2TLAJ-5718-TTNBP R	$2023.25	$2033.54	$ 2103.17	$ 2113.46
			W	B2TLAJ-5718-TTNBPW R	2083.49	2093.78	2163.41	2173.70
			L	B2TLAJ-5718-TTNBPL R	2050.65	2060.94	2130.57	2140.86
	24"(610mm)	24"(610mm)	7,8,9	B2TLAJ-5724-TTNBP R	2146.49	2156.78	2316.89	2327.18
			W	B2TLAJ-5724-TTNBPW R	2206.73	2217.02	2377.13	2387.42
			L	B2TLAJ-5724-TTNBPL R	2173.89	2184.18	2344.29	2354.58

Freestanding Storage

Personal Storage Towers - 24"W

Height	Depth	Width	Pull	Number ❶❷	Case TFL A Front TFL A	Case TFL A Front TFL B	Case TFL B Front TFL A	Case TFL B Front TFL B
65"(1651mm)H - Right-Hand Valet								
Box/Box/File								
65"(1651mm)	18"(457mm)	24"(610mm)	7,8,9	B2TRBH-6518-TTNBP R	$ 2158.77	$ 2170.10	$ 2243.01	$ 2254.34
			W	B2TRBH-6518-TTNBPW R	2234.07	2245.40	2318.31	2329.64
			L	B2TRBH-6518-TTNBPL R	2206.71	2218.04	2290.95	2302.28
	24"(610mm)	24"(610mm)	7,8,9	B2TRBH-6524-TTNBP R	2282.01	2293.34	2456.73	2468.06
			W	B2TRBH-6524-TTNBPW R	2357.31	2368.64	2532.03	2543.36
			L	B2TRBH-6524-TTNBPL R	2329.95	2341.28	2504.67	2516.00
File/File								
65"(1651mm)	18"(457mm)	24"(610mm)	7,8,9	B2TRBJ-6518-TTNBP R	$ 2157.41	$ 2168.74	$ 2241.65	$ 2252.98
			W	B2TRBJ-6518-TTNBPW R	2217.65	2228.98	2301.89	2313.22
			L	B2TRBJ-6518-TTNBPL R	2184.81	2196.14	2269.05	2280.38
	24"(610mm)	24"(610mm)	7,8,9	B2TRBJ-6524-TTNBP R	2280.65	2291.98	2455.37	2466.70
			W	B2TRBJ-6524-TTNBPW R	2340.89	2352.22	2515.61	2526.94
			L	B2TRBJ-6524-TTNBPL R	2308.05	2319.38	2482.77	2494.10
65"(1651mm)H - Left-Hand Valet								
Box/Box/File								
65"(1651mm)	18"(457mm)	24"(610mm)	7,8,9	B2TLAH-6518-TTNBP R	$ 2158.77	$ 2170.10	$ 2243.01	$ 2254.34
			W	B2TLAH-6518-TTNBPW R	2234.07	2245.40	2318.31	2329.64
			L	B2TLAH-6518-TTNBPL R	2206.71	2218.04	2290.95	2302.28
	24"(610mm)	24"(610mm)	7,8,9	B2TLAH-6524-TTNBP R	2282.01	2293.34	2456.73	2468.06
			W	B2TLAH-6524-TTNBPW R	2357.31	2368.64	2532.03	2543.36
			L	B2TLAH-6524-TTNBPL R	2329.95	2341.28	2504.67	2516.00
File/File								
65"(1651mm)	18"(457mm)	24"(610mm)	7,8,9	B2TLAJ-6518-TTNBP R	$ 2157.41	$ 2168.74	$ 2241.65	$ 2252.98
			W	B2TLAJ-6518-TTNBPW R	2217.65	2228.98	2301.89	2313.22
			L	B2TLAJ-6518-TTNBPL R	2184.81	2196.14	2269.05	2280.38
	24"(610mm)	24"(610mm)	7,8,9	B2TLAJ-6524-TTNBP R	2280.65	2291.98	2455.37	2466.70
			W	B2TLAJ-6524-TTNBPW R	2340.89	2352.22	2515.61	2526.94
			L	B2TLAJ-6524-TTNBPL R	2308.05	2319.38	2482.77	2494.10

Accessories

Counterweight

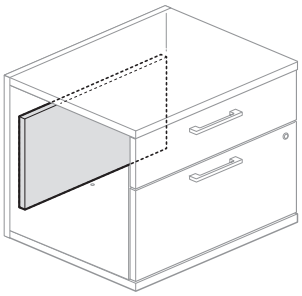

BACF
Class BH

Feature
- Includes one counterweight.

Specification Tips
- Provides additional stability to lower storage casegoods.
- For use in 15"(381mm)W freestanding pedestals and freestanding lateral files.
- All 15"(381mm)W freestanding pedestals require a counterweight.
  –1.5H will use 15"(381mm)W counterweight installed horizontally (BACF-0015-S)
  –2H will use 24"(610mm)W counterweight installed vertically (BACF-0024-S)
- All 1.5H freestanding lateral files require a counterweight.
- All 16"(406mm)D freestanding 2H or 3H lateral files require a counterweight.
- 24"(610mm)D freestanding lateral files 2H and 3H do not require a counterweight.

To Order, Specify:
1) Product number.
   (No finish specification required.)

Width	Number	Price
15"(381mm)	BACF-0015-S	$39.64
24"(610mm)	BACF-0024-S	53.37
30"(762mm)	BACF-0030-S	67.02
36"(914mm)	BACF-0036-S	80.75
42"(1067mm)	BACF-0042-S	94.40

Accessories

Slim Pedestal Top Liner

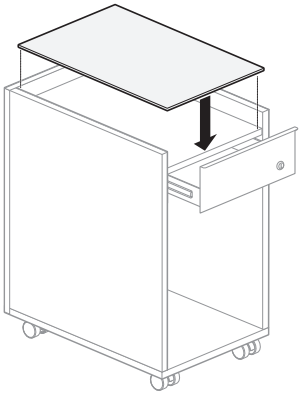

BAOI-S
Class BH

Feature
- Includes one painted steel pedestal top liner.

Specification Tips
- Only for use with Be_Hold and Be-Hold Be mobile slim pedestal.
- Not for use with Modular Lower Storage Attached Pedestals or Suspended Pedestals.
- Liner lays-in inset pedestal top; adheres with double-sided tape.

To Order, Specify:
1) Product number.
2) Trim color.

Depth	Width	Number	Trim A	Trim B
Personal Drawer/Open Mobile Pedestal				
18”(457mm)	12”(305mm)	BAOI-1812-S	$48.94	$ 55.78
24”(610mm)	12”(305mm)	BAOI-2412-S	63.04	69.88
Hinge Door Mobile Pedestal				
18”(457mm)	12”(305mm)	BAOJ-1812-S	$48.94	$ 55.78
24”(610mm)	12”(305mm)	BAOJ-2412-S	63.04	69.88

Slim Pedestal Shelf

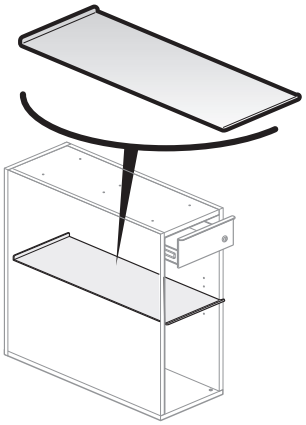

BASK-S
Class BH

Feature
- Includes one steel shelf and mounting pins.

Specification Tips
- Only for use with Be_Hold and Be_Hold Be Attached Slim Pedestal, 2H personal drawer/open.
- Measurements shown are pedestal dimensions. Refer to specification guide for actual shelf measurements.
- Shelf mounts into designated mounting locations (6.25”(159mm) adjustment range) with included mounting pins. See product details.

To Order, Specify:
1) Product number.
2) Trim color.

Depth	Width	Number	Trim A	Trim B
18”(457mm)	12”(305mm)	BASK-1812-S	$103.75	$ 111.27
24”(610mm)	12”(305mm)	BASK-2412-S	118.80	126.32
30”(762mm)	12”(305mm)	BASK-3012-S	133.85	141.37

Accessories

Personal Drawer

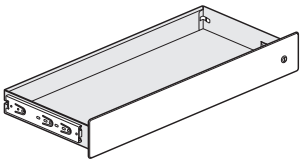

BACD-SN
BABD-SN

Class BH

Features

- Includes one black steel drawer housing with painted steel front.
- Drawer has full extension steel ball-bearing slides.
- Must be installed under a fixed shelf within open storage; not for use behind hinged doors.
- Available locking or non-locking.
- Lock plug available in black or chrome.
- Not for use with digital locks.
- For lock options, refer to Lock Program section of the Accessories Price List.

Specification Tips

- Must be specified the same width as open modular lower storage unit, open section of the credenza or full-height bookcase.
- One personal drawer is allowed beneath a fixed shelf or finished top in the following applications:
  –Open Cabinet
  –Bookcase
  –Open section of Credenza with Drawers
  –Sliding Door Credenza
- Not for use with:
  –Open Cabinet for use with HAT
  –Accessory shelf
  –Stack-On Storage
  –Overhead Storage Unit
- Drill fixture from eparts helps determine exact hole location - ships 1 per order until May 1, 2023.

To Order, Specify:

1) Product number.
❶ **Lock Option:**
   N Non-Locking
   Y Locking (add **$43.46** list)
2) Trim color.
3) Lock plug color (if applicable).

Height	Depth	Width	Number ❶	Trim A	Trim B
For use with Credenza					
4”(102mm)	12”(305mm)	18”(457mm)	BACD-0418-SN	$ 188.64	$ 195.48
		24”(610mm)	BACD-0424-SN	200.02	206.86
		30”(762mm)	BACD-0430-SN	211.40	218.24
		36”(914mm)	BACD-0436-SN	222.78	229.62
For use with Full-Height Bookcase/Modular Lower Storage Open Cabinet					
4”(102mm)	12”(305mm)	18”(457mm)	BABD-0418-SN	$ 188.64	$ 195.48
		24”(610mm)	BABD-0424-SN	200.02	206.86
		30”(762mm)	BABD-0430-SN	211.40	218.24
		36”(914mm)	BABD-0436-SN	222.78	229.62

Accessories

Hardware Kit — Height Adjustable Table Integration

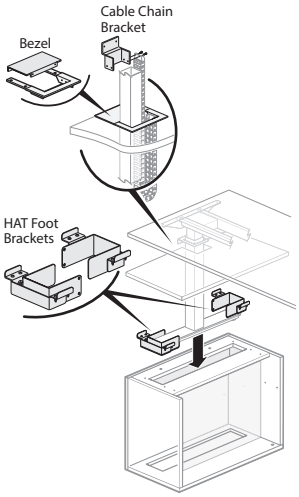

BAHJ-0100-S
Class BH – Open Market

Features
- Includes bezel, foot bracket, cable chain bracket and mounting screws.
- Bezel covers field cut notch in modular or common top for HAT leg installation.

Specification Tips
- For use with 0.75”(19mm) thick top only.
- Hardware Kit is specific to a particular height adjustable table line (ie. Planes, Upside); specify accordingly.
- Not for use with Planes LT Height Adjustable Table.
- For use with separately specified Cable Chain (EAUW-4002-H).
- Compatible with Wire Manager Mesh.

To Order, Specify:
1) Product number, including:
❶ **Table Option:**
- **A** Planes Single Stage
- **J** Upside Single Stage

2) Trim color.

Number ❶	Trim A	Trim B
BAH ■ -0100-S	$284.49	$290.82

Cable Chain

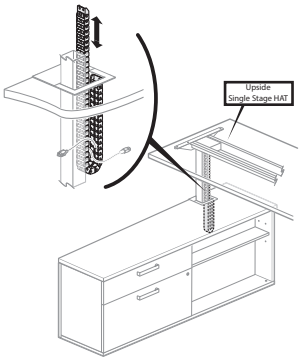

EUAW-4002-H
Class BH

Features
- Includes 36”(914mm) active length cable-chain and mounting screws.
- For use with Upside and Planes Height Adjustable Tables only.
- Standard in Black only.
- Mounts to separately specified cable chain bracket and HAT bezel when used in Be_Hold or Be_Hold Be.

Specification Tips
- For use with Upside and Planes Single Stage Height Adjustable Tables only in integrated product applications with Be_Hold and Be_Hold Be 1.5H Modular Lower Storage for HAT.
- Holds up to three power cords and two data cables.

To Order, Specify:
1) Product number.
(No finish specification required.)

Height	Width	Actual Length	Installed Length	Number	Price
0.75”(19mm)	1.5”(38mm)	40”(1016mm)	36”(914mm)	EUAW-4002-H	$427.55

Bag Liner

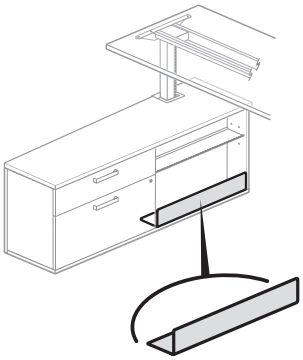

BAGB-S
BAGC-S
Class BH

Feature
- Includes one painted steel bag liner.

Specification Tips
- For use with 16”(406mm)D HAT Credenzas and 16”(406mm)D HAT Open Storage.
- Allows for storage in front of the removable false back.

To Order, Specify:
1) Product number.
2) Trim color.

Depth	Width	Number	Trim A	Trim B
Open Cabinet for HAT				
6”(152mm)	30”(762mm)	BAGB-0630-S	$ 95.67	$ 112.06
	36”(914mm)	BAGB-0636-S	103.87	120.26
Credenza with Drawers for HAT				
6”(152mm)	30”(762mm)	BAGC-0630-S	$ 95.67	$ 112.06
	36”(914mm)	BAGC-0636-S	103.87	120.26

Accessories

Open HAT Lower Storage Shelf

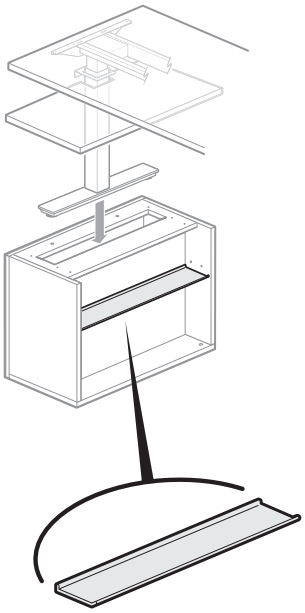

BASB-S
Class BH

Feature
- Includes one steel shelf and mounting pins.

Specification Tips
- Width shown is storage cabinet width. Refer to specification guide for actual shelf widths.
- Only for use with HAT Lower Storage cabinet.
- Shelf installs into designated mounting locations with included pins. See product details.
- Weight limit 20 lbs. per shelf.

To Order, Specify:
1) Product number.
2) Trim color.

Depth	Width	Number	Trim A	Trim B
6"(152mm)	30"(762mm)	BASB-0630-S	$ 112.77	$120.29
	36"(914mm)	BASB-0636-S	120.29	127.81

HAT Credenza Shelf

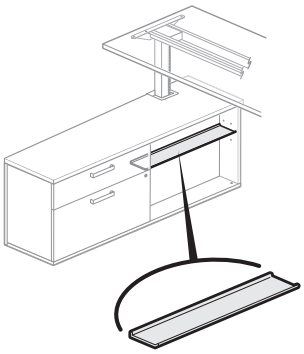

BASD-S
Class BH

Feature
- Includes one steel shelf and mounting pins.

Specification Tips
- Only for use with HAT Credenza.
- Width shown is credenza width. Refer to Product Details for actual shelf widths.
- One additional shelf allowed per unit.
- Weight capacity of 20 lbs. per shelf.
- Shelf mounts in designated mounting locations with included pins. See Product Details.
- Height adjustment of 3"(76mm) up and down.

To Order, Specify:
1) Product number.
2) Trim color.

Depth	Width	Number	Trim A	Trim B
Credenza with Drawers				
6"(152mm)	30"(762mm)	BASD-0630-S	$ 112.77	$120.29
	36"(914mm)	BASD-0636-S	120.29	127.81

Accessories

Reference Ledge

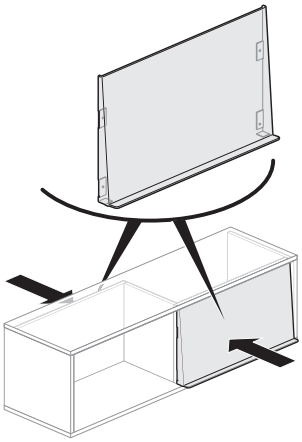

BALS-S
BALT-S
Class BH

Features

- Includes one painted steel reference ledge.
- Available as single sided or dual sided.
- Dual sided reference ledge will be two pieces with half width per side.
- Designed for use on Be_Hold or Be_Hold Be overhead storage unit (OSU).

Specification Tips

- Adds ledge to the bottom of the OSU for layering visual display items.
- Reference ledge may not span two adjacent Overhead Storage Units.
- Not for use with:
  – Compose Overhead Storage Units

To Order, Specify:

1) Product number.
2) Trim color.

Height	Width	Number	Trim A	Trim B
For use with Single Sided OSU				
15”(381mm)	24”(610mm)	BALS-1524-S	$ 147.64	$ 157.58
	30”(762mm)	BALS-1530-S	166.10	176.04
	36”(914mm)	BALS-1536-S	184.56	194.50
	42”(1067mm)	BALS-1542-S	203.02	212.96
	48”(1219mm)	BALS-1548-S	221.48	231.42
	54”(1372mm)	BALS-1554-S	253.62	263.56
	60”(1524mm)	BALS-1560-S	285.76	295.70
	66”(1676mm)	BALS-1566-S	317.90	327.84
	72”(1829mm)	BALS-1572-S	350.04	359.98
For use with Dual Sided OSU				
15”(381mm)	36”(914mm)	BALT-1536-S	$ 257.02	$266.96
	42”(1067mm)	BALT-1542-S	275.48	285.42
	48”(1219mm)	BALT-1548-S	293.94	303.88
	54”(1372mm)	BALT-1554-S	312.40	322.34
	60”(1524mm)	BALT-1560-S	330.86	340.80
	66”(1676mm)	BALT-1566-S	349.32	359.26
	72”(1829mm)	BALT-1572-S	367.78	377.72

Accessories

Slat Rail

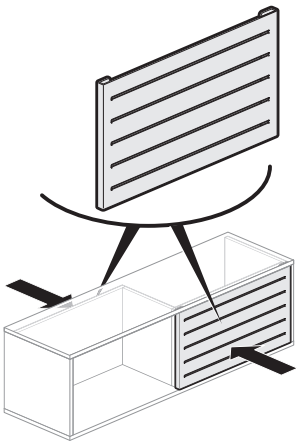

BARS-S
BART-S

Class BH

Features

- Includes one painted steel rail.
- Available as single sided or dual sided.
- Dual sided slat rail will be two pieces with half width per side.
- Designed for use on Be_Hold or Be_Hold Be 1H Overhead Storage Unit (OSU).
- Compatible with Belong and Jumpstuff work tools.

Specification Tips

- Maximum of two trays per slat section. Each tray maximum weight capacity is 5 lbs.
- Not for use with:
  – Compose Overhead Storage Units

To Order, Specify:

1) Product number.
2) Trim color.

Height	Width	Number	Trim A	Trim B
For use with Single Sided OSU				
15”(381mm)	24”(610mm)	BARS-2415-S	$ 170.88	$ 177.72
	30”(762mm)	BARS-3015-S	191.40	198.24
	36”(914mm)	BARS-3615-S	211.92	218.76
	42”(1067mm)	BARS-4215-S	232.44	239.28
	48”(1219mm)	BARS-4815-S	252.96	259.80
	54”(1372mm)	BARS-5415-S	273.48	280.32
	60”(1524mm)	BARS-6015-S	294.00	300.84
	66”(1676mm)	BARS-6615-S	314.52	321.36
	72”(1829mm)	BARS-7215-S	335.04	341.88
For use with Dual Sided OSU				
15”(381mm)	36”(914mm)	BART-3615-S	$ 280.28	$ 287.12
	42”(1067mm)	BART-4215-S	300.80	307.64
	48”(1219mm)	BART-4815-S	321.32	328.16
	54”(1372mm)	BART-5415-S	341.84	348.68
	60”(1524mm)	BART-6015-S	362.36	369.20
	66”(1676mm)	BART-6615-S	382.88	389.72
	72”(1829mm)	BART-7215-S	403.40	410.24

Accessories

Tackboards

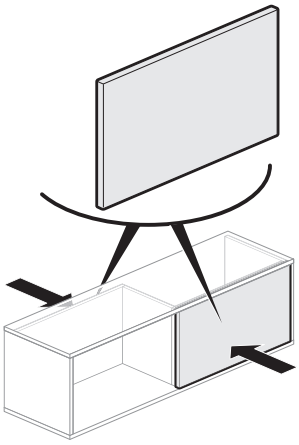

BATS-F
BATT-F
Class BH

Features
- Includes one tackboard.
- Available as single sided or dual sided.
- Dual sided tackboard will be two pieces with half width per side.
- Designed for use on Be_Hold and Be_Hold Be 1H Overhead Storage Unit (OSU).

Specification Tips
- Tackboard may not span two adjacent Overhead Storage Units.
- Tackboard inserts into recessed back and held in place with Velcro.
- Not for use with:
  –0.5"(13mm)H Overhead Storage Unit
  –Compose Overhead Storage Units

To Order, Specify:
1) Product number.
2) Fabric surface/color.

Height	Width	Number	Fabric A	B	C	D	E	F	G	H
For use with Single Sided OSU										
15"(381mm)	24"(610mm)	BATS-1524-F	$ 116.20	$ 135.47	$ 157.32	$ 180.44	$203.58	$ 235.70	$254.98	$286.23
	30"(762mm)	BATS-1530-F	131.57	152.49	176.18	201.27	226.39	261.25	282.16	316.06
	36"(914mm)	BATS-1536-F	146.94	169.51	195.04	222.10	249.20	286.80	309.34	345.89
	42"(1067mm)	BATS-1542-F	162.31	186.53	213.90	242.93	272.01	312.35	336.52	375.72
	48"(1219mm)	BATS-1548-F	177.68	203.55	232.76	263.76	294.82	337.90	363.70	405.55
	54"(1372mm)	BATS-1554-F	193.05	220.57	251.62	284.59	317.63	363.45	390.88	435.38
	60"(1524mm)	BATS-1560-F	208.42	237.59	270.48	305.42	340.44	389.00	418.06	465.21
	66"(1676mm)	BATS-1566-F	223.79	254.61	289.34	326.25	363.25	414.55	445.24	495.04
	72"(1829mm)	BATS-1572-F	239.16	271.63	308.20	347.08	386.06	440.10	472.42	524.87
For use with Dual Sided OSU										
15"(381mm)	36"(914mm)	BATT-1536-F	$ 201.62	$ 241.84	$ 287.32	$335.55	$383.84	$450.83	$490.99	$ 556.15
	42"(1067mm)	BATT-1542-F	216.99	258.86	306.18	356.38	406.65	476.38	518.17	585.98
	48"(1219mm)	BATT-1548-F	232.36	275.88	325.04	377.21	429.46	501.93	545.35	615.81
	54"(1372mm)	BATT-1554-F	247.73	292.90	343.90	398.04	452.27	527.48	572.53	645.64
	60"(1524mm)	BATT-1560-F	263.10	309.92	362.76	418.87	475.08	553.03	599.71	675.47
	66"(1676mm)	BATT-1566-F	278.47	326.94	381.62	439.70	497.89	578.58	626.89	705.30
	72"(1829mm)	BATT-1572-F	293.84	343.96	400.48	460.53	520.70	604.13	654.07	735.13

COM Fabric Yardage Requirements					
Dimension		66 Inch Roll (Linear Yards)		54 Inch Roll (Linear Yards)	
Height	Width	Directional	Railroad	Directional	Railroad
Fabric Tackboards for OSU					
15"(381mm)	24"(610mm)	0.5	0.75	0.5	0.75
	30"(762mm)	0.75	1.0	0.75	1.0
	36"(914mm)	0.75	1.0	0.75	1.0
	42"(1067mm)	1.0	1.25	1.0	1.25
	48"(1219mm)	1.0	1.5	1.0	1.5
	54"(1372mm)	1.0	1.5	1.0	1.5
	60"(1524mm)	1.25	1.75	N/A	N/A
	66"(1676mm)	1.25	1.75	N/A	N/A
	72"(1829mm)	1.5	2.0	N/A	N/A

Accessories

TFL Shelf — for use with Bookcase, Storage Cabinet and Stack-On units

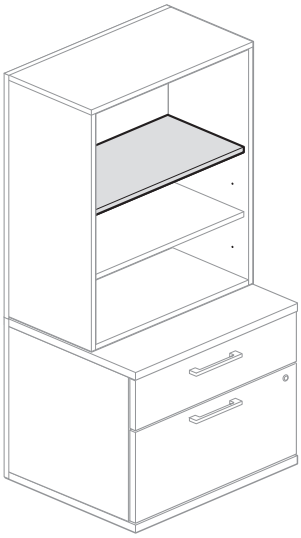

B2ASF-T
Class BH – Open Market

Feature
- Includes one thermally fused laminate (TFL) shelf with 1mm edgeband on all sides, and mounting pins.

Specification Tips
- Shelf inserts with mounting pins into designated mounting locations. See Product Details.
- Measurements shown are Storage unit dimensions. Refer to Product Details for actual shelf measurements.
- 16"(406mm)D shelf for use with Bookcase, Storage Cabinet and Open and Hinged Door Stack-On Units. 24"(610mm)D shelf for use with Bookcase and Storage Cabinet.

To Order, Specify:
1) Product number.
2) TFL color.

Depth	Width	Weight Capacity	Number	TFL A	B
16"(406mm)	18"(457mm)	35 lbs	B2ASF-1618-T	$ 109.31	$ 119.03
	24"(610mm)	50 lbs	B2ASF-1624-T	120.89	133.85
	30"(762mm)	70 lbs	B2ASF-1630-T	132.47	148.67
	36"(914mm)	85 lbs	B2ASF-1636-T	144.05	163.49
24"(610mm)	18"(457mm)	60 lbs	B2ASF-2418-T	$ 118.72	$128.44
	24"(610mm)	85 lbs	B2ASF-2424-T	130.30	143.26
	30"(762mm)	100 lbs	B2ASF-2430-T	141.88	158.08
	36"(914mm)	100 lbs	B2ASF-2436-T	153.46	172.90

Accessories

TFL Shelf — for use with Wardrobe

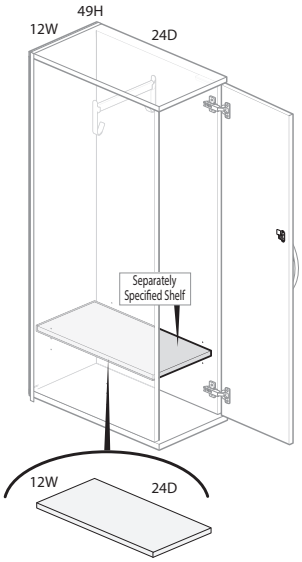

B2ASW-T
Class BH – Open Market

Feature
- Includes one thermally fused laminate (TFL) shelf and mounting pins.

Specification Tips
- For use with Be_Hold Be Wardrobes only.
- For use at bottom location only.
- Installs into designated mounting location. See Product Details.
- Measurements shown are wardrobe dimensions. Refer to Product Details for actual shelf measurements.
- Not compatible with Be_Hold TFL shelf.

To Order, Specify:
1) Product number.
2) TFL color.

Depth	Width	Weight Capacity	Number	TFL A	B
16”(406mm)	12”(305mm)	20 lbs	B2ASW-1612-T	$ 97.73	$ 104.21
	15”(381mm)	30 lbs	B2ASW-1615-T	103.52	111.62
	18”(457mm)	40 lbs	B2ASW-1618-T	109.31	119.03
18”(457mm)	12”(305mm)	25 lbs	B2ASW-1812-T	$ 99.91	$106.39
	15”(381mm)	35 lbs	B2ASW-1815-T	105.70	113.80
	18”(457mm)	45 lbs	B2ASW-1818-T	111.49	121.21
24”(610mm)	12”(305mm)	35 lbs	B2ASW-2412-T	$ 107.14	$ 113.62
	15”(381mm)	50 lbs	B2ASW-2415-T	112.93	121.03
	18”(457mm)	65 lbs	B2ASW-2418-T	118.72	128.44
30”(762mm)	12”(305mm)	50 lbs	B2ASW-3012-T	$ 112.94	$ 119.42
	15”(381mm)	65 lbs	B2ASW-3015-T	118.73	126.83
	18”(457mm)	70 lbs	B2ASW-3018-T	124.52	134.24

Accessories

TFL Shelf — for use with Personal Storage Tower

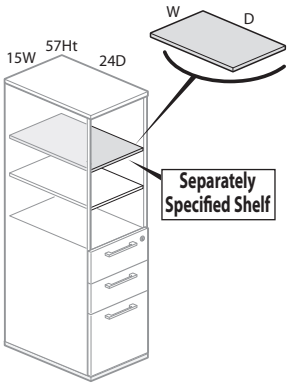

B2ASE-2415-TS

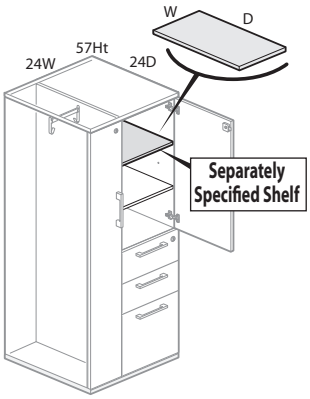

B2ASE-2424-TF

Feature

- Includes one thermally fused laminate (TFL) shelf and mounting hardware.

Specification Tips

- For use in 49”(1245mm)H, 57”(1448mm)H or 65”(1651mm)H Personal Storage Tower bookcase or hinged door storage.
- Shelf inserts into designated mounting locations. See product details.
- Measurements shown are personal storage tower dimensions. Refer to specification guide for actual shelf measurements.

To Order, Specify:

1) Product number.
2) TFL color.

Depth	Width	Weight Capacity	Number	TFL A	B
Front Bookcase and Hinged Door PST Shelf					
18”(457mm)	15”(381mm)	35 lbs	B2ASE-1815-TF	$105.70	$ 113.80
24”(610mm)	15”(381mm)	50 lbs	B2ASE-2415-TF	112.93	121.03
30”(762mm)	15”(381mm)	65 lbs	B2ASE-3015-TF	118.73	126.83
Side Bookcase PST Shelf					
18”(457mm)	15”(381mm)	35 lbs	B2ASE-1815-TS	$105.70	$ 113.80
24”(610mm)	15”(381mm)	50 lbs	B2ASE-2415-TS	112.93	121.03
30”(762mm)	15”(381mm)	65 lbs	B2ASE-3015-TS	118.73	126.83

Accessories

Desk to Storage Bracket

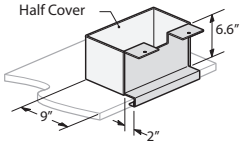

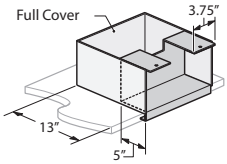

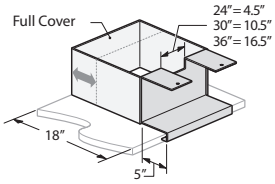

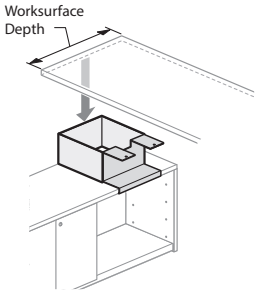

ZBGT-PHN
ZBGT-PFN

Class BH

Features

- Includes one bracket with cover and attachment hardware.
- Bracket height: 6.6"(168mm).
- Cover Options:
  –Half Cover depth is 9"(229mm) with 2"(51mm) recess.
  –Full Cover depth is adjustable and provides two planning positions; 13"(330mm) or 18"(457mm).

Specification Tips

- Provides support to one end of an Adaptable Rectangular Convergent Worksurface; 29"(737mm) finished height worksurface.
- For use with open lower storage to allow user access to lower storage contents.
- Attaches an Adaptable Rectangular Convergent Worksurface to Be_Hold Be casegood top above an attached 1.5H modular lower storage unit or 1.5H preconfigured storage credenza.
- Desk-to-Storage bracket with half cover supports convergent worksurface overhang of 9"(229mm).
- Desk-to-Storage bracket with full cover supports convergent worksurface overhang of 13"(330mm)-18"(457mm).
- Not for use with:
  –X Series lower storage
  –Single column desk support
  –Be_Hold Be 1.5H Sliding Door Credenza
- Refer to Specification Guide for product application information.

To Order, Specify:

1) Product number.
2) Trim color.

Description	Bracket Width	Number	Trim A	Trim B
Half Cover for use with 0.75"(19mm) Top				
24"(610mm) D Worksurface	12"(305mm)	ZBGT-2924-PHN	$ 136.70	$143.54
30"(762mm) D Worksurface	18"(457mm)	ZBGT-2930-PHN	157.20	164.04
36"(914mm) D Worksurface	24"(610mm)	ZBGT-2936-PHN	177.70	184.54
Full Cover for use with 0.75"(19mm) Top				
24"(610mm) D Worksurface	12"(305mm)	ZBGT-2924-PFN	$ 150.37	$ 157.21
30"(762mm) D Worksurface	18"(457mm)	ZBGT-2930-PFN	177.71	184.55
36"(914mm) D Worksurface	24"(610mm)	ZBGT-2936-PFN	205.05	211.89

Accessories

Tower to Desk Bracket with Hook

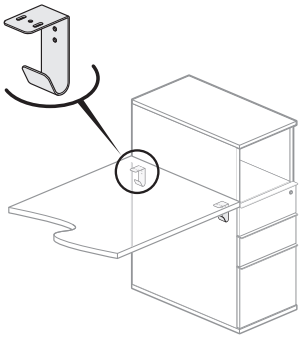

ZBBH-0000-SN
Class BH

Feature
- Includes one painted metal bracket with hook and attachment hardware.

Specification Tips
- Provides attachment between full-height storage and an edgeband worksurface while providing a place to hang small items; briefcase, handbag, backpack, jacket etc.
- For use with Be_Hold Be Wardrobe and Personal Storage Tower.
- Not for use with Intuity.
- Not for use with knife edge.
- Two brackets are required to support a worksurface.
- Weight capacity 20 lbs.

To Order, Specify:
1) Product number.
2) Trim color.

Height	Depth	Width	Number	Trim A	Trim B
4.5"(102mm)	3"(76mm)	2"(51mm)	ZBBH-0000-SN	$25.29	$32.13

Convergent Brackets

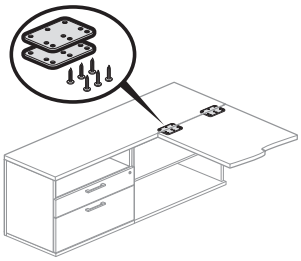

ZBBC-0000-SN
Class CA

Feature
- Includes **two** black painted steel brackets and eight screws.

Specification Tips
- Attaches perpendicular worksurface to front, underside of modular lower storage top or common top.
- For use with open or sliding door modular lower storage.

To Order, Specify:
1) Product number.
(No finish specification required.)

Number	Price
ZBBC-0000-SN	$27.34

Worksurface-to-Storage Bracket

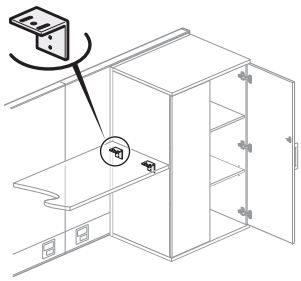

ZUBW-0000-PN
Class BD

Feature
- Includes: One steel non-handed bracket and hardware.

Specification Tips
- Two ZUBW-0000-PN brackets (standard in Black) are used to attach one end of an Adaptable Worksurface in an off modular worksurface condition in a Compose panel application. Worksurface must have additional panel or floor support.
- For use with Be_Hold Be Wardrobe and Personal Storage Tower.
- Refer to the Compose Price Book, Specification Guide for additional product application guidelines.

To Order, Specify:
1) Product number.
(No finish specification required.)

Product Application	Number	Price
Adaptable WS	ZUBW-0000-PN	$38.18

Accessories

Overhead Storage Unit Ganging Tie Plate Bracket

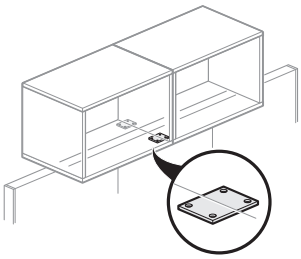

BAGT-0000
Class BH

Features
- Includes one bracket and attachment hardware.
- Available in Charcoal only.

Specification Tips
- Designed to be used with Be_Hold and Be_Hold Be overhead storage unit in top mount positions only.
- Quantity of brackets dependent on application use.

To Order, Specify:
1) Product number.
   (No finish specification required.)

Number	Price
BAGT-0000	$64.33

Storage-to-Storage Ganging Bracket

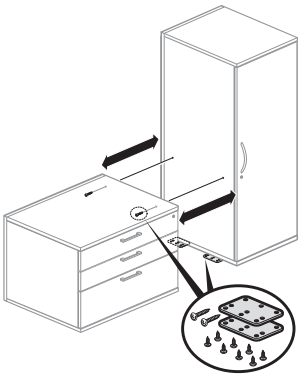

BAGK-0000
Class BH

Features
- Includes two brackets, eight short screws and two long screws.
- Available in black only.

Specification Tips
- Designed to attach multiple casegoods together for stability.
- All 12"(305mm)W casegoods and 15"(381mm)W x 18"(457mm)D Personal Storage Towers must be ganged together or attached to a panel for required casegood support; refer to the specification guide for application guidelines.
- Ganging casegoods together eliminates the need for a separately specified counterweight.
- Brackets and short screws are used to gang the underside of two casegoods together. Longer screws are used to attach the side panel of the shorter unit to the side panel of the adjacent casegood.
- Ganging bracket not for use with mobile storage.

To Order, Specify:
1) Product number.
   (No finish specification required.)

Number	Price
BAGK-0000	$69.11

Accessories

Compose Panel-to-Storage Bracket — C5 Be_Hold and Be_Hold Be Credenza

ZZBF-1600-PNA
Used 2H Lower Storage
16" H

ZZBF-1000-PNA
Used 1.5H Lower Storage
10" H

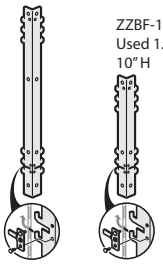

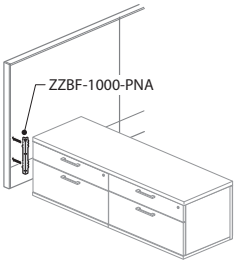

1.5H Lower storage must be
Perpendicular to Compose Panel

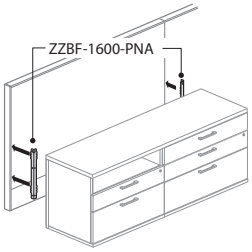

2H Lower storage
Parallel to Compose Panel

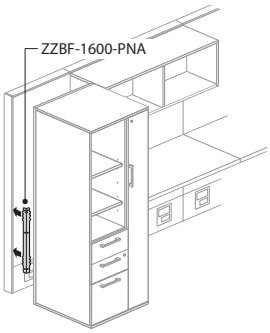

Full-Height storage
Parallel to Compose Panel

ZZBF-PNA
Class CA

Features

- Includes one non-handed bracket and mounting hardware.
- Available in user specified trim colors.
- Installs in Compose panel frame slots and attaches to the back corner of the storage.

Specification Tips

- **For use with Compose full panel frames, only.**
- Not for use with Compose glass panels, Compose Connections or Compose Beam.
- Not for use with X Series, V Series or Compose storage.
- Bracket attachment requires field drilling the storage.
- The Support and Load guidelines shown below require additional planning information shown in Compose Specification Guide located in Compose Price Book; plan accordingly:
  10"(254mm)H bracket:
  –The 10"(254mm)H bracket used with Be_Hold Be 1.5H attached lower storage provides Group B support in a Compose application.
  –1.5H attached lower storage must be used perpendicular to the panel application.
  16"(406mm)H bracket:
  –The 16"(406mm)H bracket used with Be_Hold Be 2H or 3H attached lower storage or full height storage and provides Group A support in a Compose application.
  –2H and 3H attached lower storage may be used parallel or perpendicular to a Compose panel application.
  –The 16"(406mm)H bracket used with full-height storage including a Bookcase, Storage Cabinet, Wardrobe or Personal Storage Tower, provides Group A support in a Compose panel application. Exception: Does not apply to 12"(305mm)W casegoods or 15"(381mm)W x 18"(457mm)D PST.
  –Full height storage may be used parallel or perpendicular to the Compose panel application.
- Refer to the Compose Price Book, Specification Guide for additional product application guidelines.

To Order, Specify:

1) Product number.
2) Trim color.

Bracket Height	Storage Height	Number	Trim A	Trim B
10"(254mm)	1.5H	ZZBF-1000-PNA	$139.97	$160.19
16"(406mm)	2H or over	ZZBF-1600-PNA	139.97	160.19

Accessories

Belong Drawer Divider

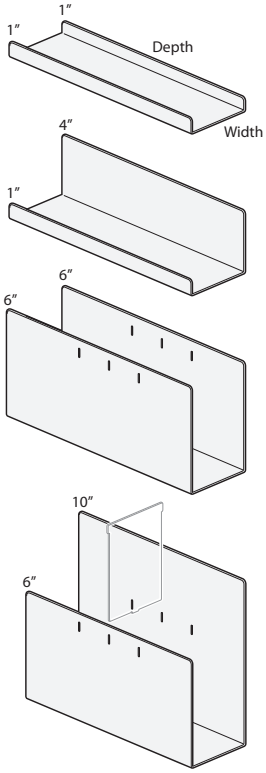

KUOD-S
KUOB-S
KUOL-S
KUOF-S

Class YA

Features

- Includes one painted steel drawer divider.
- No mounting needed. Divider is freestanding and slides freely in the drawer for flexible drawer division.
- 1”(25mm)H for use in Slim Pedestal personal drawer or Be_Hold Be box drawer.
- 4”(102mm)H for use in all composite wood box drawers.
- 6”(152mm)H and 10”(254mm)H only for use in composite wood file drawers.

Specification Tip

- 6”(152mm)H and 10”(254mm)H accept Drawer Divider Partitions; maximum of three partitions per Drawer Divider.

To Order, Specify:

1) Product number.
2) Trim color.

Height Side A	Side B	Depth	Width	Number	Trim A	Trim B
Personal Drawer/Box Drawer						
1”(25mm)	1”(25mm)	12”(305mm)	3”(76mm)	KUOD-0103-S	$ 100.15	$ 117.31
4”(102mm)	1”(25mm)	12”(305mm)	3”(76mm)	KUOB-0403-S	106.81	123.97
File Drawer						
6”(152mm)	6”(152mm)	12”(305mm)	4”(102mm)	KUOL-0604-S	$120.06	$137.22
10”(254mm)	6”(152mm)	12”(305mm)	4”(102mm)	KUOF-1004-S	128.31	145.47

Accessories

Belong Drawer Divider Partition

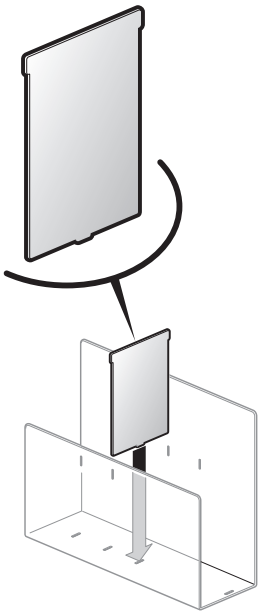

KUOP-0504-S
Class YA

Feature
- Includes one steel snap in drawer divider partition.

Specification Tips
- For use in 6"(152mm)H and 10"(254mm)H Belong Drawer Dividers to subdivide into smaller compartments.
- A maximum of three partitions may be used per each Drawer Divider.

To Order, Specify:
1) Product number.
2) Trim color.

Height	Width	Number	Trim A	Trim B
5"(127mm)	4"(102mm)	KUOP-0504-S	$28.59	$35.74

Accessories

Belong Drawer Tray

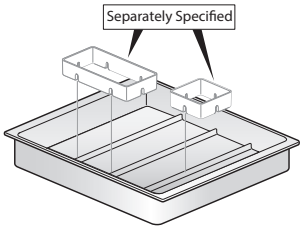

KUOK-1311-H
Class YA

Features
- Includes one plastic drawer tray.
- Accepts separately specified Belong Organizational Rings.

Specification Tips
- For use in Be_Hold Be box drawer.

To Order, Specify:
1) Product number.
2) Trim color.
   TR-R Beige
   TR-1R Brownstone
   TR-RR Rusty Red
   TR-FM Snow

Depth	Width	Number	Trim A	Trim B
11"(279mm)	13"(330mm)	KUOK-1311-H	$215.54	$222.74

Belong Drawer Liner

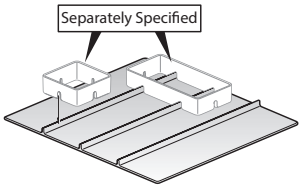

KUON-H
Class YA

Features
- Includes one ridged plastic drawer liner.
- Accepts separately specified Belong Organizational Rings.

Specification Tips
- 9"(229mm)W drawer liner designed for use in slim pedestals with steel drawers only.
- 12"(305mm)W drawer liner for use in any composite wood drawer.
- For use in letter depth drawers.

To Order, Specify:
1) Product number.
2) Trim color.
   TR-R Beige
   TR-1R Brownstone
   TR-RR Rusty Red
   TR-FM Snow

Depth	Width	Number	Trim A	Trim B
12"(305mm)	9"(229mm)	KUON-1209-H	$200.20	$207.35
12"(305mm)	12"(305mm)	KUON-1212-H	200.20	207.35

Belong Organizational Rings

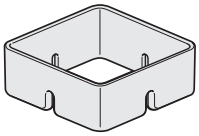

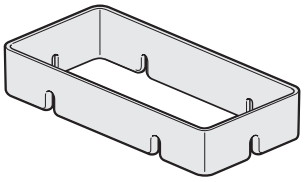

KUOR-0000-H
Class YA

Features
- Includes one square and one rectangle plastic organizational rings.
  –Square 2.75"(70mm) x 2.75"(70mm)
  –Rectangle 2.75"(70mm) x 5.5"(140mm)
- Rings have slots on bottom to attach to drawer liner or drawer tray. Can also be used as a stand alone item.

Specification Tips
- Provides compartmental storage for small items.
- Drawer liner ridges hold organizational rings in place.
- May be used with both Belong Drawer Tray and Belong Drawer Liner.
- May be used without drawer liner; may shift with drawer movement.

To Order, Specify:
1) Product number.
2) Trim color.
   TR-R Beige
   TR-1R Brownstone
   TR-RR Rusty Red
   TR-FM Snow

Number	Trim A	Trim B
KUOR-0000-H	$71.49	$78.64

Accessories

Belong Slim C Cubby

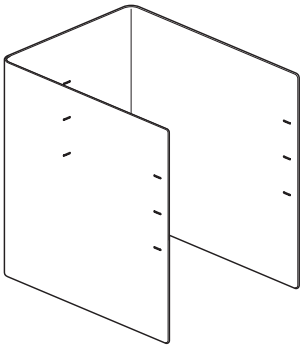

KUCU-S
Class YA

Features
- Includes one freestanding steel Open Slim C Cubby.
- Freestanding Belong Slim C Cubby's are designed for supporting binders and books.
- Standard with slots to accommodate separately specified slim divider shelf. (KUCH-1210-S).

Specification Tips
- Sits on top of a fixed or accessory shelf.
- For use in a configured storage credenza, a modular storage credenza, modular storage unit, a single stand alone modular storage unit, stack-on bookcase or a full-height bookcase.
- 13"(330mm)H and 15"(381mm)H Belong Slim C Cubby can be used in 16"(406mm)H Overhead Storage Unit.

To Order, Specify:
1) Product number.
2) Trim color.

Height	Depth	Width	Number	Trim A	Trim B
7"(178mm)	12"(305mm)	10"(254mm)	KUCU-0710-S	$139.36	$156.07
13"(330mm)	12"(305mm)	10"(254mm)	KUCU-1310-S	164.44	181.15
15"(381mm)	12"(305mm)	10"(254mm)	KUCU-1510-S	172.80	189.51

Belong Slim C Cubby Divider Shelf

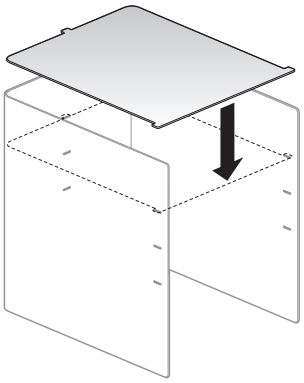

KUCH-1210-S
Class YA

Feature
- Includes one painted steel Slim C Cubby divider shelf.

Specification Tips
- Provides compartmental storage in Belong Slim C Cubby.
- Maximum quantity of dividers per cubby height:
  –7"(178mm)H cubby will accept 1 cubby divider
  –13"(330mm)H cubby will accept up to 3 cubby dividers
  –15"(381mm)H cubby will accept up to 3 cubby dividers
- Weight limit is 5 lbs. per shelf.

To Order, Specify:
1) Product number.
2) Trim color.

Height	Width	Number	Trim A	Trim B
12"(305mm)	10"(254mm)	KUCH-1210-S	$63.95	$80.66

Magnetic Divider

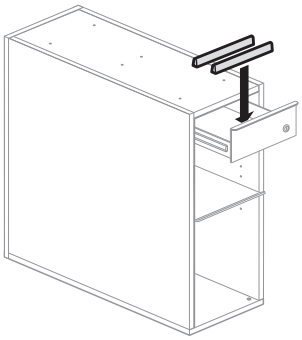

AAOD-0111-S
Class BH

Feature
- Includes one magnetic aluminum divider.

Specification Tip
- Designed for use with Be_Hold or Be_Hold Be Slim Pedestal Personal steel drawers.

To Order, Specify:
1) Product number.
2) Trim color.

Height	Width	Number	Trim A	Trim B
1"(25mm)	11"(279mm)	AAOD-0111-S	$50.08	$56.13

Accessories

Personal Tray

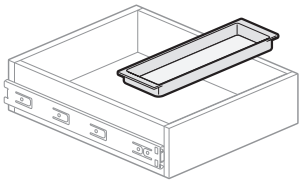

KJTY-10
Class YA

Features

- Includes one rectangle plastic tray.
  –Outside dimensions: 1.38”(35mm)H x 5.88”(149mm)W x 12.87”(327mm)L
  –Inside dimensions: 1.25”(32mm)H x 5.63”(143mm)W x 11.5”(292mm)L
- Can be hung between the separately specified dividers of the Drawer Insert.
- Standard in black.

Specification Tip

- For use in all wood composite box drawers.

To Order, Specify:

1) Product number.
   (No finish specification required.)

Height	Depth	Width	Number	Price
1.38″(35mm)	5.88″(149mm)	12.87″(327mm)	KJTY-10	$46.21

Pencil Tray

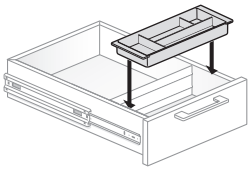

JPTA-6
Class FP

Features

- Includes one black plastic tray.
- Suspends from sides of 6”(152mm) drawer and slides for drawer access.

To Order, Specify:

1) Product number.
   (No finish specification required.)

Height	Depth	Width	Number	Price
1.25″(32mm)	5.5″(140mm)	12.875″(327mm)	JPTA-6	$55.79

Be_Hold Be Resources

Surfaces Materials
Index
Warranty

Surface Materials

Finish Color Legend

Trim

Grade A

TR-R	Beige
TR-K	Charcoal
TR-J	Graphite
TR-AA	Putty
TR-E	Smoke
TR-PLS	Smooth Plaster

Grade B

TR-DM	Dark Bronze Metallic
TR-LE	Metallic Silver
TR-1Q	Park
TR-RR	Rusty Red
TR-1M	Sable
TR-1J	Sky Blue

Lock Plugs

LR-BL	Black
LR-BP	Chrome

Laminate (TFL)*

Grade A

Solid

G-AK	Chalk
G-WL	Linen
G-AA	Putty

Grade B

G-KN	Grey Elm
G-KM	Landmark
G-AE	Maple
G-KL	Neo Walnut

Laminate (HPL)

Grade A

Solid Color

H-34	Beige
H-AK	Chalk
H-8J	Charcoal
H-3J	Graphite
H-62	Gray Tone
H-WL	Linen
H-3P	Platinum
H-AA	Putty
H-3E	Smoke

Patterned

H-P1	Linen Casual
H-P2	Linen Classic
H-P3	Linen Crisp
H-P4	Linen Flax

Wood Grain

H-B06	Brazilwood
H-E79	Colombian Walnut
H-AE	Maple
H-DYP	New Age Oak
H-E15	River Cherry
H-C09	Williamsburg Cherry

Grade B

Premium Wood Grain

H-C8	Blonde Modern Cherry
H-D1	Daintree
H-KP	Field Elm
H-KN	Grey Elm
H-KM	Landmark Wood
H-D2	Mocha Modern Cherry
H-KL	Neo Walnut
H-KR	Phantom Ecru
H-KS	Phantom Pearl
H-C9	Spiced Modern Cherry

Grade E

Premium

H-C1	Hay
H-C2	Drift
H-C3	Pecan
H-C4	Molasses
H-C5	Mineral
H-C6	Hatch
H-C7	Tanned

Edgeband

Solid Color

HP-34	Beige
HP-AK	Chalk
HP-8J	Charcoal
HP-3J	Graphite
HP-62	Gray Tone
HP-WL	Linen
HP-3P	Platinum
HP-AA	Putty
HP-3E	Smoke

Patterned Edgeband

HP-P1	Linen Casual
HP-P2	Linen Classic
HP-P3	Linen Crisp
HP-P4	Linen Flax

Wood Grain

HP-C8	Blonde Modern Cherry
HP-B06	Brazilwood
HP-E79	Colombian Walnut
HP-D1	Daintree
HP-KP	Field Elm
HP-KN	Grey Elm
HP-KM	Landmark Wood
HP-AE	Maple
HP-D2	Mocha Modern Cherry
HP-KL	Neo Walnut
HP-DYP	New Age Oak
HP-KR	Phantom Ecru
HP-KS	Phantom Pearl
HP-E15	River Cherry
HP-C9	Spiced Modern Cherry
HP-C09	Williamsburg Cherry

Ply-Edge

HP-PW	Ply-Edge

Premium

HP-C1	Hay
HP-C2	Drift
HP-C3	Pecan
HP-C4	Molasses
HP-C5	Mineral
HP-C6	Hatch
HP-C7	Tanned

* Customer's own TFL requests are not available at this time.

ALERT: These materials are current, however they are being considered for future obsolescence due to low volume.

Laminate (HPL)

H-AM	Amber Cherry
H-AD	Medium Cherry

Edgeband

HP-AM	Amber Cherry
HP-AD	Medium Cherry

Surface Materials

Fabrics/Color Legend

Vertical Fabrics

Grade A

(6X)	Chevron
(35)	Etch
(L6)	Highlands
(C1)	Striae
(PY)	Tailored
(3A)	Tellure

Grade B

(4HV)	Blanket
(33)	Camp
(L5)	Classic
(34)	Fields
(3JV)	Hobson
(6)	Hue
(ZR)	Kio
(3LV)	Novelty
(32)	Peca
(PV)	Ritz
(WS)	Shimmer

Grade C

(SW)	Sisal
(45)	Thorman

Grade D

(6KV)	Dots
(3SV)	Scapes

Seating Fabrics

Grade A

(4H)	Blanket
(3J)	Hobson
(4J)	Morse
(3L)	Novelty
(2A)	Pixel
(3A)	Tellure
(XJ)	Wellington Faux Leather

Grade B

(4N)	Diagonale
(4Z)	Element
(4E)	English Tweed
(S6)	Floyd by Kvadrat
(S4)	Kaleidoscope
(SN)	Pemberton
(4V)	Ramie
(S8)	Reflect by Kvadrat
(MV)	Tech

Grade C

(6K)	Dots
(67)	King II
(4T)	Oceanic
(3S)	Scapes

Grade D

(LW)	Atlas by Kvadrat
(4D)	Big Arrow
(1K)	Big Diagonale
(NV)	Clara 2 by Kvadrat
(66)	Class II
(JB)	Cotswold
(6M)	Main Line Flax
(S7)	Melange Nap by Kvadrat
(RP)	Recheck by Kvadrat

Grade E

(XG)	Brisa Faux Leather
(SY)	Steelcut Trio 3 by Kvadrat

Grade F

(SV)	Divina Melange 3 by Kvadrat
(SZ)	Hallingdal 65 by Kvadrat

* For most current finish and fabric availability please reference surfaces.haworth.com.

ALERT: These materials are current, however they are being considered for future obsolescence due to low volume.

Vertical Fabrics

Grade C

(PH)	Birds Nest

Seating Fabrics

Grade A

(MM)	Twist

Grade B

(1X)	Gauge

Haworth+

For information on the Haworth+ alliance program, including images and product availability, please refer to: Haworth.com > Surface Collection > Haworth+ Library

Customer's OwnMaterial (COM)

For general Customer's Own Material (COM) information including processes and forms, please refer to:
Haworth.com > Surface Collection > Resources > COM
For information on approved COM's, please refer to:
Haworth.com > Surface Collection > COM Library

Index

Products are listed alphabetically in this index by alpha-numeric prefix/suffix codes.

Product Code	Product Description	Page
AAOD-0111-S	Accessories – Magnetic Divider	150
AUSK	Upper Storage Support – For use with Intuity Benching, Be_Hold and Be_Hold Be — Stanchion	87
B2ASE-2415-TS	Accessories – TFL Shelf — for use with Personal Storage Tower	142
B2ASE-2424-TF	Accessories – TFL Shelf — for use with Personal Storage Tower	142
B2ASF-T	Accessories – TFL Shelf — for use with Bookcase, Storage Cabinet and Stack-On units	140
B2ASW-T	Accessories – TFL Shelf — for use with Wardrobe	141
B2B22N-1630	Modular Lower Storage – 1.5H Storage Cabinet — Open	28
B2B22X-TTPY	Modular Lower Storage – 1.5H Storage for Height Adjustable Table - Preconfigured - Attached — Open Cabinet	63
B2B28N-1630	Modular Lower Storage – 2H Storage Cabinet - Attached — Open	31
B2B42N-1630	Modular Lower Storage – 3H Storage Cabinet — Open	34
B2B49N-TTPNN	Freestanding Storage – Bookcase	96
B2B57N-TTPNN	Freestanding Storage – Bookcase	96
B2B65N-TTPNN	Freestanding Storage – Bookcase	96
B2CAB-TTBP	Modular Lower Storage – 1.5H Credenza - Preconfigured - Mobile — Drawers	62
B2CAB-TTBP	Modular Lower Storage – 1.5H Credenza - Preconfigured — Drawers	53
B2CCB-TTBP	Modular Lower Storage – 2H Credenza - Preconfigured - Attached — Drawers	57
B2CRR-TTNP	Modular Lower Storage – 1.5H Credenza - Preconfigured — Sliding Doors	52
B2CSR-TTNP	Modular Lower Storage – 2H Credenza - Preconfigured - Attached — Sliding Doors	56
B2CYC-TTBP	Modular Lower Storage – 1.5H Credenza for Height Adjustable Table - Preconfigured - Attached — Drawers	64
B2F20-TT	Upper Storage – Stack-On Storage Cabinet - for 2H Lower Storage — Singled Hinged Door	78
B2F20-TTN	Upper Storage – Stack-On Storage Cabinet - for 2H Lower Storage — Double Hinged Door	79
B2F27-TT	Upper Storage – Stack-On Storage Cabinet - for 1.5H Lower Storage — Singled Hinged Door	75
B2F27-TTN	Upper Storage – Stack-On Storage Cabinet - for 1.5H Lower Storage — Double Hinged Door	76
B2F28-TT	Upper Storage – Stack-On Storage Cabinet - for 2H Lower Storage — Singled Hinged Door	78
B2F28-TTN	Upper Storage – Stack-On Storage Cabinet - for 2H Lower Storage — Double Hinged Door	79
B2F35-TT	Upper Storage – Stack-On Storage Cabinet - for 1.5H Lower Storage — Singled Hinged Door	75
B2F35-TTN	Upper Storage – Stack-On Storage Cabinet - for 1.5H Lower Storage — Double Hinged Door	76
B2F36-TT	Upper Storage – Stack-On Storage Cabinet - for 2H Lower Storage — Singled Hinged Door	78
B2F36-TTN	Upper Storage – Stack-On Storage Cabinet - for 2H Lower Storage — Double Hinged Door	79
B2F43-TT	Upper Storage – Stack-On Storage Cabinet - for 1.5H Lower Storage — Singled Hinged Door	75
B2F43-TTN	Upper Storage – Stack-On Storage Cabinet - for 1.5H Lower Storage — Double Hinged Door	76
B2LAA-1642	Modular Lower Storage – 1.5H Lateral File — Box/File	38
B2LAC-1642	Modular Lower Storage – 2H Lateral File - Attached — Open/Box/File	45
B2LAH-1642	Modular Lower Storage – 2H Lateral File - Attached — Box/Box/File	41
B2LAJ-1642	Modular Lower Storage – 2H Lateral File - Attached — File/File	43
B2LAK-1642	Modular Lower Storage – 3H Lateral File — File/File/File	47
B2LAV-1642	Modular Lower Storage – 1.5H Lateral File — Open/File	40
B2N20-TNN	Upper Storage – Stack-On Bookcase - for 2H Lower Storage — Open	77
B2N27-TNN	Upper Storage – Stack-On Bookcase - for 1.5H Lower Storage — Open	74
B2N28-TNN	Upper Storage – Stack-On Bookcase - for 2H Lower Storage — Open	77
B2N35-TNN	Upper Storage – Stack-On Bookcase - for 1.5H Lower Storage — Open	74
B2N36-TNN	Upper Storage – Stack-On Bookcase - for 2H Lower Storage — Open	77
B2N43-TNN	Upper Storage – Stack-On Bookcase - for 1.5H Lower Storage — Open	74
B2OHP-TTN	Upper Storage – Overhead Storage Unit — Hinged Door — Single Sided	85
B2OL-TTN	Upper Storage – Overhead Storage Unit — Sliding Door — Single Sided	83
B2OM-TTN	Upper Storage – Overhead Storage Unit — Sliding Door — Dual Sided	84
B2OS-TNN	Upper Storage – Overhead Storage Unit — Open — Single Sided	81
B2OT-TNN	Upper Storage – Overhead Storage Unit — Open — Dual Sided	82
B2PAA-1615	Modular Lower Storage – 1.5H Pedestal — Drawers	19
B2PAD-3012	Modular Lower Storage – 2H Slim Pedestal - Attached — Personal Drawer/Open	17
B2PAG-3012	Modular Lower Storage – 2H Slim Pedestal - Attached — Hinged Door	18

Index

Product Code	Product Description	Page
B2PAH-1615	Modular Lower Storage – 2H Pedestal - Attached — Drawers	20
B2PAJ-1615	Modular Lower Storage – 2H Pedestal - Attached — Drawers	20
B2PMA-2415	Modular Lower Storage – 1.5H Pedestal - Mobile — Drawers	24
B2PMD-2412	Modular Lower Storage – 1.5H Slim Pedestal - Mobile — Personal Drawer/Open	22
B2PMG-2412	Modular Lower Storage – 1.5H Slim Pedestal - Mobile — Hinged Door	23
B2PMH-2415	Modular Lower Storage – 2H Pedestal - Mobile — Drawers	25
B2S22-1618	Modular Lower Storage – 1.5H Storage Cabinet — Single Hinged Door — 18”W	29
B2S22-2436	Modular Lower Storage – 1.5H Storage Cabinet — Double Hinged Door — 24”W, 30”W, 36”W	30
B2S28-1618	Modular Lower Storage – 2H Storage Cabinet - Attached — Single Hinged Door — 18”W	32
B2S28-2436	Modular Lower Storage – 2H Storage Cabinet - Attached — Double Hinged Door — 24”W, 30”W, 36”W	33
B2S42-2418	Modular Lower Storage – 3H Storage Cabinet — Single Hinged Door — 18”W	35
B2S42-2430	Modular Lower Storage – 3H Storage Cabinet — Double Hinged Door — 24”W, 30”W, 36”W	36
B2S49-TT	Freestanding Storage – Storage Cabinet — Single Hinged Door	99
B2S65-TTNP	Freestanding Storage – Storage Cabinet — Double Hinged Door	100
B2TLAH-4130	Freestanding Storage – Personal Storage Towers - 24"W — Hinged Door Upper Storage	128
B2TLAH-5730	Freestanding Storage – Personal Storage Towers - 24"W — Hinged Door Upper Storage	128
B2TLEH-4130	Freestanding Storage – Personal Storage Towers - 24"W — Front Bookcase Upper Storage	120
B2TLEH-4930	Freestanding Storage – Personal Storage Towers - 24"W — Front Bookcase Upper Storage	120
B2TLH-4930	Freestanding Storage – Personal Storage Towers - 24"W — Side Bookcase Upper Storage	124
B2TLH-6530	Freestanding Storage – Personal Storage Towers - 24"W — Side Bookcase Upper Storage	124
B2TNCJ-4930	Freestanding Storage – Personal Storage Towers - 15"W — Side Bookcase Upper Storage	112
B2TNCJ-6530	Freestanding Storage – Personal Storage Towers - 15"W — Side Bookcase Upper Storage	112
B2TNDH-4130	Freestanding Storage – Personal Storage Towers - 15"W — Side Bookcase Upper Storage	112
B2TNDH-5730	Freestanding Storage – Personal Storage Towers - 15"W — Side Bookcase Upper Storage	112
B2TNEH-4130	Freestanding Storage – Personal Storage Towers - 15"W — Front Bookcase Upper Storage	109
B2TNEH-5730	Freestanding Storage – Personal Storage Towers - 15"W — Front Bookcase Upper Storage	109
B2TNLH-4130	Freestanding Storage – Personal Storage Towers - 15"W — Hinged Door Upper Storage	117
B2TNLH-6530	Freestanding Storage – Personal Storage Towers - 15"W — Hinged Door Upper Storage	117
B2TRBH-4930	Freestanding Storage – Personal Storage Towers - 24"W — Hinged Door Upper Storage	128
B2TRBH-6530	Freestanding Storage – Personal Storage Towers - 24"W — Hinged Door Upper Storage	128
B2TREJ-5730	Freestanding Storage – Personal Storage Towers - 24"W — Front Bookcase Upper Storage	120
B2TREJ-6530	Freestanding Storage – Personal Storage Towers - 24"W — Front Bookcase Upper Storage	120
B2TRJ-4130	Freestanding Storage – Personal Storage Towers - 24"W — Side Bookcase Upper Storage	124
B2TRJ-5730	Freestanding Storage – Personal Storage Towers - 24"W — Side Bookcase Upper Storage	124
B2W41-TTN	Freestanding Storage – Single Hinged Door Wardrobe	103
B2W49-TTN	Freestanding Storage – Single Hinged Door Wardrobe	103
B2W57-TTN	Freestanding Storage – Single Hinged Door Wardrobe	103
B2W65-TTN	Freestanding Storage – Single Hinged Door Wardrobe	103
BABD-SN	Accessories – Personal Drawer	134
BACD-SN	Accessories – Personal Drawer	134
BACF	Accessories – Counterweight	132
BAGB-S	Accessories – Bag Liner	135
BAGC-S	Accessories – Bag Liner	135
BAGK-0000	Accessories – Storage-to-Storage Ganging Bracket	145
BAGT-0000	Accessories – Overhead Storage Unit Ganging Tie Plate Bracket	145
BAHJ-0100-S	Accessories – Hardware Kit — Height Adjustable Table Integration	135
BALS-S	Accessories – Reference Ledge	137
BALT-S	Accessories – Reference Ledge	137
BAOI-S	Accessories – Slim Pedestal Top Liner	133
BARS-S	Accessories – Slat Rail	138
BART-S	Accessories – Slat Rail	138
BASB-S	Accessories – Open HAT Lower Storage Shelf	136

Index

Product Code	Product Description	Page
BASD-S	Accessories – HAT Credenza Shelf	136
BASK-S	Accessories – Slim Pedestal Shelf	133
BATS-F	Accessories – Tackboards	139
BATT-F	Accessories – Tackboards	139
BAUF-F	Modular Lower Storage Cushions – Cushion Top — Filing and Storage Cushion Top	72
BAUP-F	Modular Lower Storage Cushions – Cushion Top — Pedestal Cushion Top	72
BMAL-YYYYS	Modular Lower Storage Tops – 1.5H Height Adjustable Table Storage Top - Laminate - 0.75" Thick — HAT Storage Top	67
BMBL-JYJYS	Modular Lower Storage Tops – 2H Storage Tops - Laminate - 1.18″ Thick — Filing and Storage Top	68
BMBL-JYJYS	Modular Lower Storage Tops – 2H Storage Tops - Laminate - 1.18″ Thick — Pedestal Top	68
BMBL-JYJYS	Modular Lower Storage Tops – Common Top - Laminate - 1.18" Thick — Common Top	69
EUAW-4002-H	Accessories – Cable Chain	135
JPTA-6	Accessories – Pencil Tray	151
KJTY-10	Accessories – Personal Tray	151
KUCH-1210-S	Accessories – Belong Slim C Cubby Divider Shelf	150
KUCU-S	Accessories – Belong Slim C Cubby	150
KUOB-S	Accessories – Belong Drawer Divider	147
KUOD-S	Accessories – Belong Drawer Divider	147
KUOF-S	Accessories – Belong Drawer Divider	147
KUOK-1311-H	Accessories – Belong Drawer Tray	149
KUOL-S	Accessories – Belong Drawer Divider	147
KUON-H	Accessories – Belong Drawer Liner	149
KUOP-0504-S	Accessories – Belong Drawer Divider Partition	148
KUOR-0000-H	Accessories – Belong Organizational Rings	149
QZBT-0000	Upper Storage Support – For use with Compose and UniGroup Too Panels — Center Mount Overhead Storage Unit — Top Mount Bracket – Compose and UniGroup Too Panels	91
UZCC	Upper Storage Support – For use with Compose Panels — Off-Modular Top Trim Mounting 24"(610mm)-120"(3048mm) for Compose	89
UZCC-AAZ	Upper Storage Support – For use with Compose 26"(660mm) High Panel, Compose Connections and Compose Beam — Off Modular Rail for mounting Compose to Be_Hold Upper Storage – Stanchion Mounted	92
UZRC-0000	Upper Storage Support – For use with Compose 26"(660mm) High Panel, Compose Connections and Compose Beam — End Cap, Off-Modular Rail – For use with Be_Hold Upper Storage – Stanchion Mounted	92
ZBBB-PCN	Upper Storage Support – For use with Intuity Benching — Worksurface to Storage Bracket – Intuity without Access Hatch	88
ZBBC-0000-SN	Accessories – Convergent Brackets	144
ZBBH-0000-SN	Accessories – Tower to Desk Bracket with Hook	144
ZBBM-PSN	Upper Storage Support – For use with Intuity Benching — Worksurface to Storage Bracket – Intuity with Access Hatch Mid-Mod Mount	88
ZBGT-PFN	Accessories – Desk to Storage Bracket	143
ZBGT-PHN	Accessories – Desk to Storage Bracket	143
ZUBW-0000-PN	Accessories – Worksurface-to-Storage Bracket	144
ZVBM-PWN	Upper Storage Support – For use with Compose and UniGroup Too Panels — Center Mount Overhead Storage Unit — Worksurface to Storage Bracket – Compose 26"(660mm) High Panel, Compose Connections and Compose Beam Mount	91
ZVBM-PZN	Upper Storage Support – For use with Compose 26"(660mm) High Panel, Compose Connections and Compose Beam — Off-Modular Rail Mounting — Worksurface to Storage Bracket – For use ith Off-Modular Rail – Compose 26"(660mm) High Panel, Compose Connections and Compose Beam	94
ZZBF-PNA	Accessories – Compose Panel-to-Storage Bracket — C5 Be_Hold/Be_Hold Be and A Series Credenza	146
ZZBP-PAN	Upper Storage Support – For use with Compose 26"(660mm) High Panel, Compose Connections and Compose Beam — Centered Single Panel Mount — Stanchion for use with Standard Aluminum Top Trim	90
ZZBP-PAZ	Upper Storage Support – For use with Compose 26"(660mm) High Panel, Compose Connections and Compose Beam — Off-Modular Rail Mounting — Off-Modular Stanchion – For use with Standard Aluminum Top Trim	93

Index

Product Code	Product Description	Page
ZZBP-PGN	Uppoer Storage Support – For use with Compose 26"(660mm) High Panel, Compose Connections and Compose Beam — Centered Single Panel Mount — Stanchion for use with Work Rail Top Trim	90
ZZBP-PGZ	Upper Storage Support – For use with Compose 26"(660mm) High Panel, Compose Connections and Compose Beam — Off-Modular Rail Mounting — Off-Modular Stanchion – For use with Work Rail Top Trim	93

HAWORTH

Product Compatibility and Limited Warranty Policy

Great Expectations

You have them as a Haworth customer and so do we. And because we value our customers, we cover our products with the Haworth North America Product Compatibility and Limited Warranty Policy.

Our Commitment To Product Compatibility – Integrated Product Platforms

As a market leader in the design and manufacture of workspaces that adapt to change, we strive to maintain product compatibility within our various generations of integrated product platforms. This benefits the customer who desires to update or modify their work environment. It also benefits the customer needing to replace a product due to damage or other reasons but which is no longer manufactured or is otherwise unavailable, such as a fabric or finish that is discontinued because of changing market preferences. In both circumstances, we often can provide products with comparable function and performance.

Our Commitment To Product Quality – The Haworth North America Limited Warranty

To ensure customer satisfaction and peace of mind, we stand behind our products with the Haworth North America Limited Warranty. To review the current version of the limited warranty including its terms and conditions, please go to: **www.haworth.com/warranty** or contact **OneTouch@Haworth.com or 1 877 429 6784**.

Warranty Requests or Questions

For questions or service requests pertaining to the Haworth Limited Warranty, please contact your Haworth dealer. If you are unsure who your dealer is, please contact **OneTouch@Haworth.com or 1 877 429 6784**.

Terms of Sale

The Terms of Sale apply to all products in the North America Price Lists. To review the current version of the North American Terms of Sale, please go to:
www.haworth.com/terms-of-sale or contact **OneTouch@Haworth.com or 1 877 429 6784**.

HAWORTH

HAWORTH® is a registered trademark of Haworth, Inc.
© Haworth, Inc. All rights reserved. 2025 5.25
haworth.com | 800 344 2600